Alessio ruokapöytä

Kokoamisohje

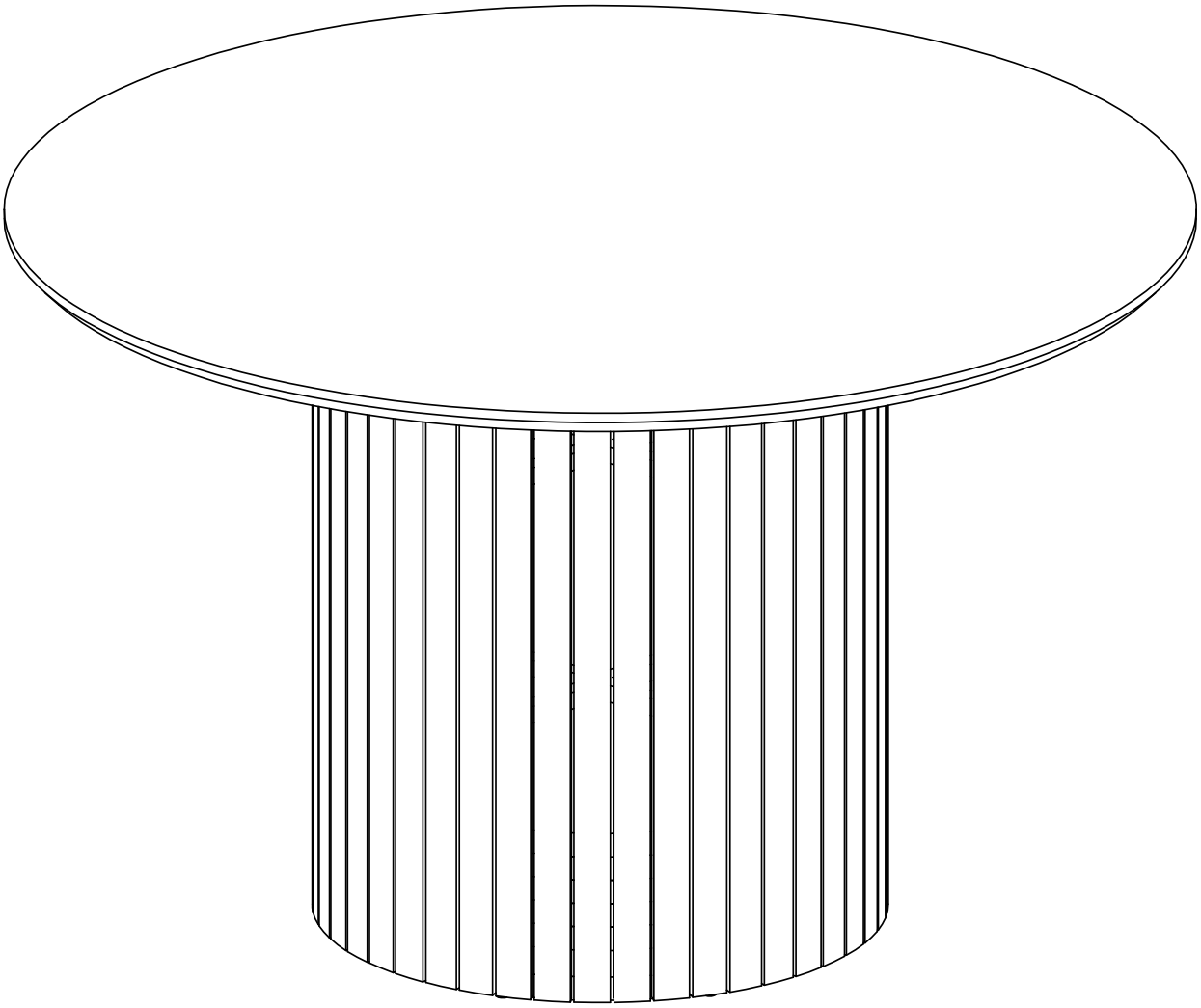

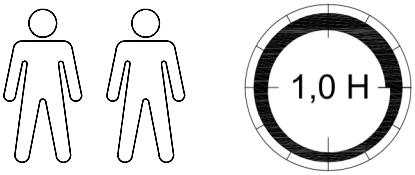

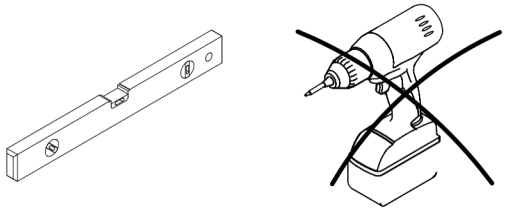

08/09/2022

veke

			√
1	1	Ø 1200X25mm	
2	1	Ø 556X150mm	
3	3	585X718X12mm	

			√
4	1	Ø 556X20mm	
5	2	518X518X18mm	
6	4	675X70X20mm	

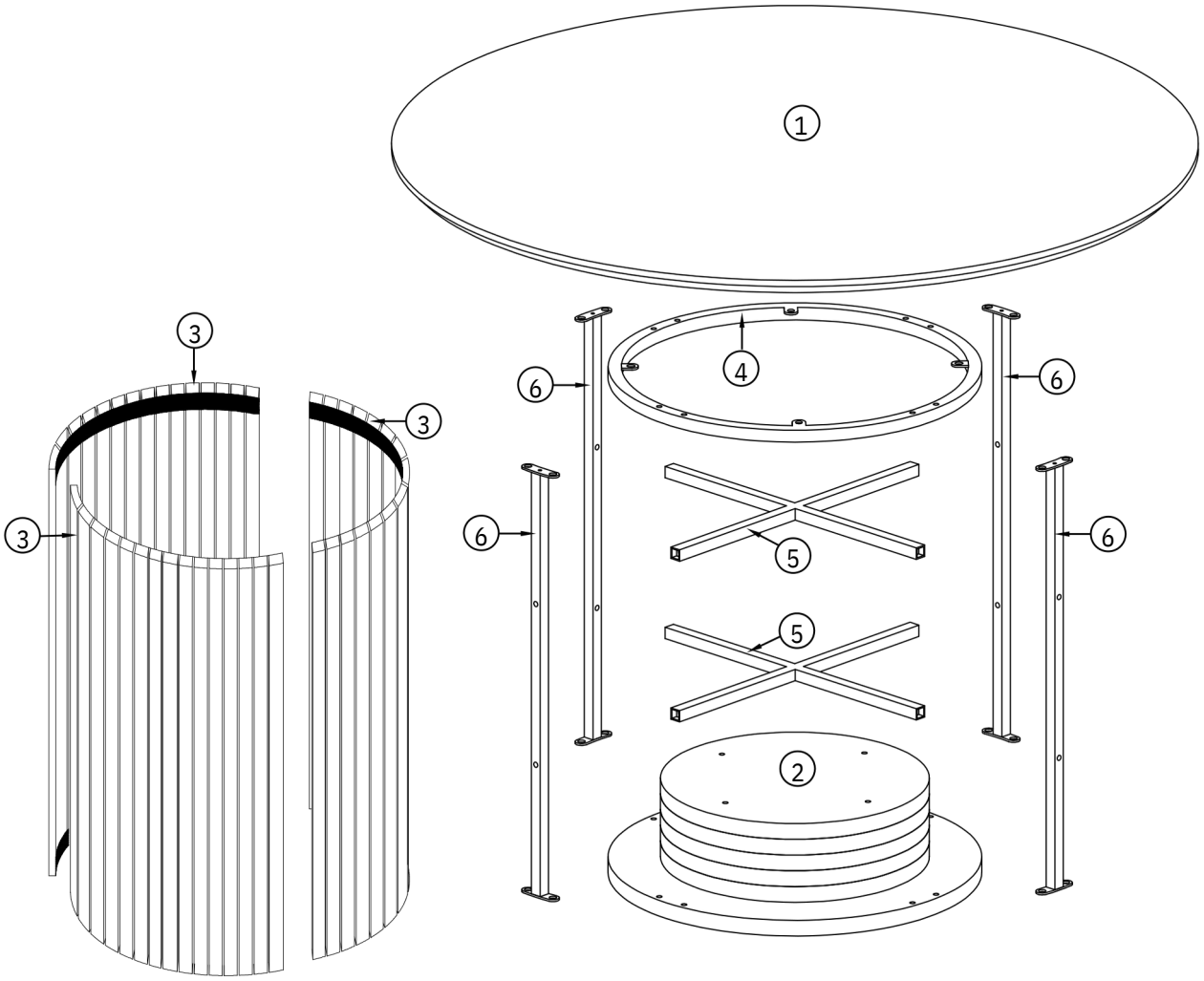

A x 20	B x 8	C x 8	D x 1
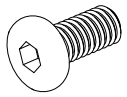	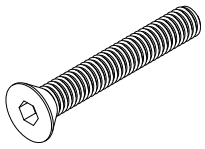	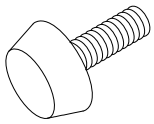	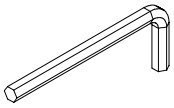
M6 x 15 mm	M6 x 40 mm	M6/Ø16x15	4 mm

veke

1

B x 8	D x 1
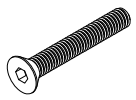	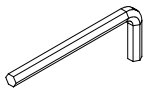
M6 x 40 mm	4 mm

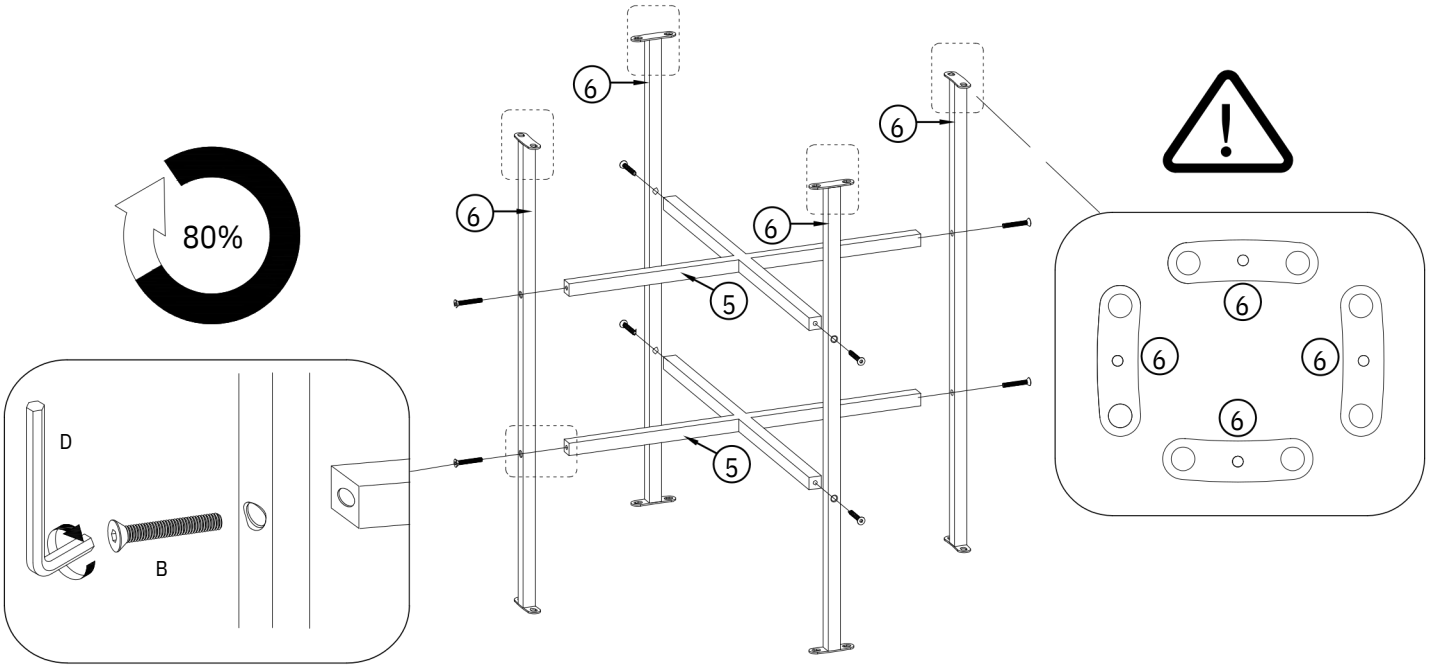

2

A x 8	D x 1
M6 x 15 mm	4 mm

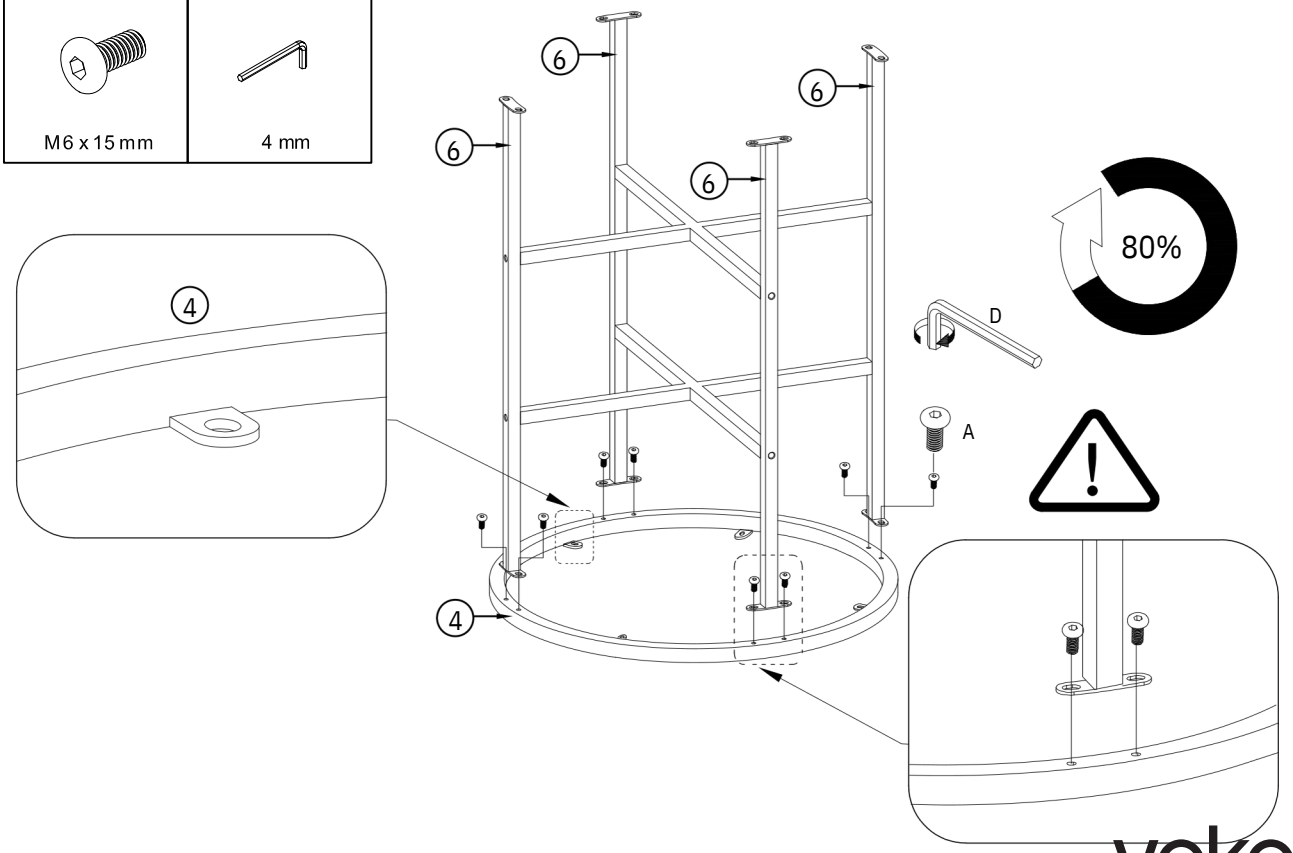

veke

3

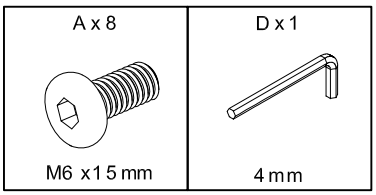

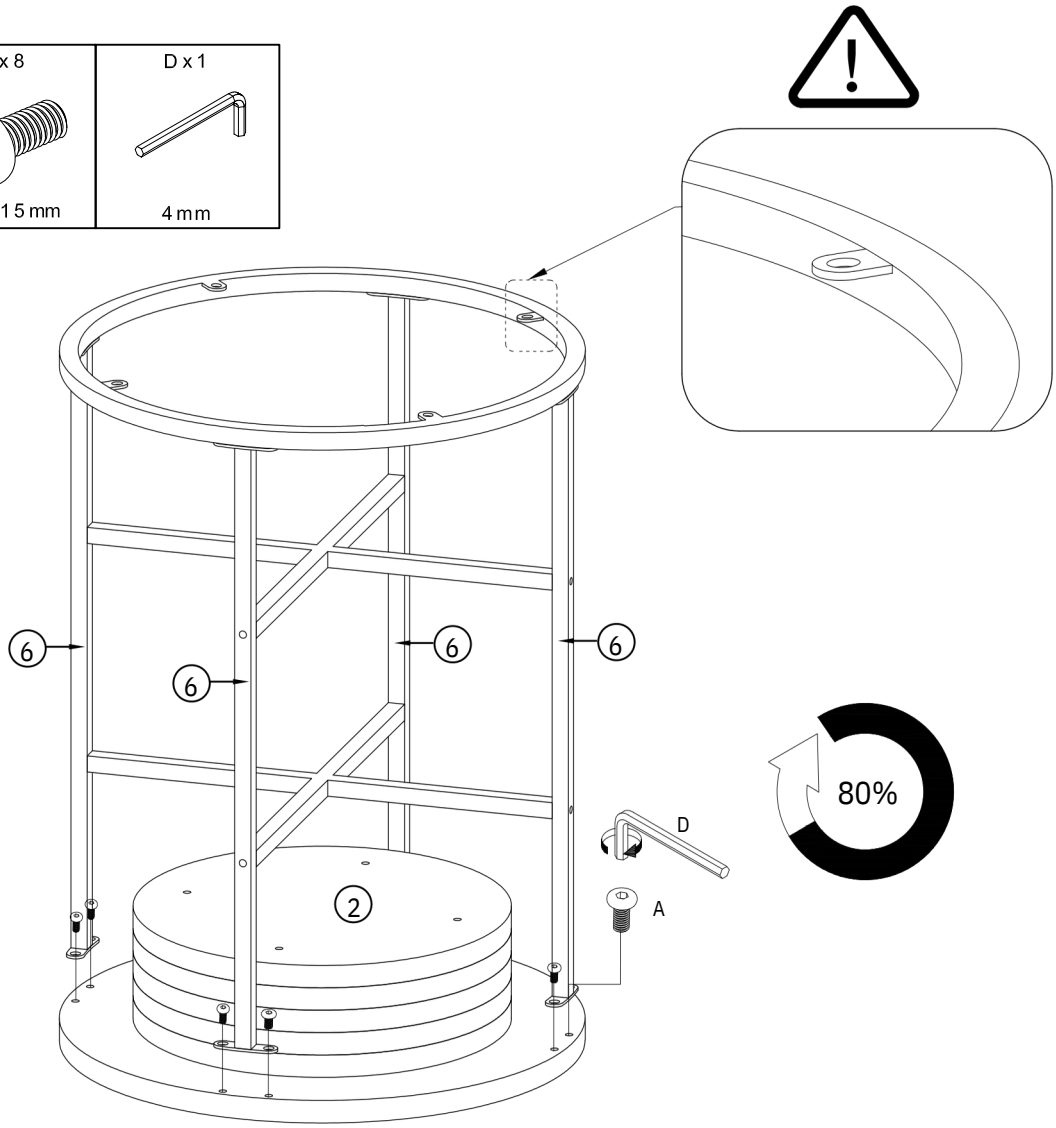

4

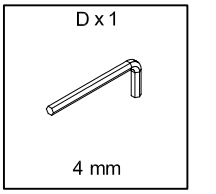

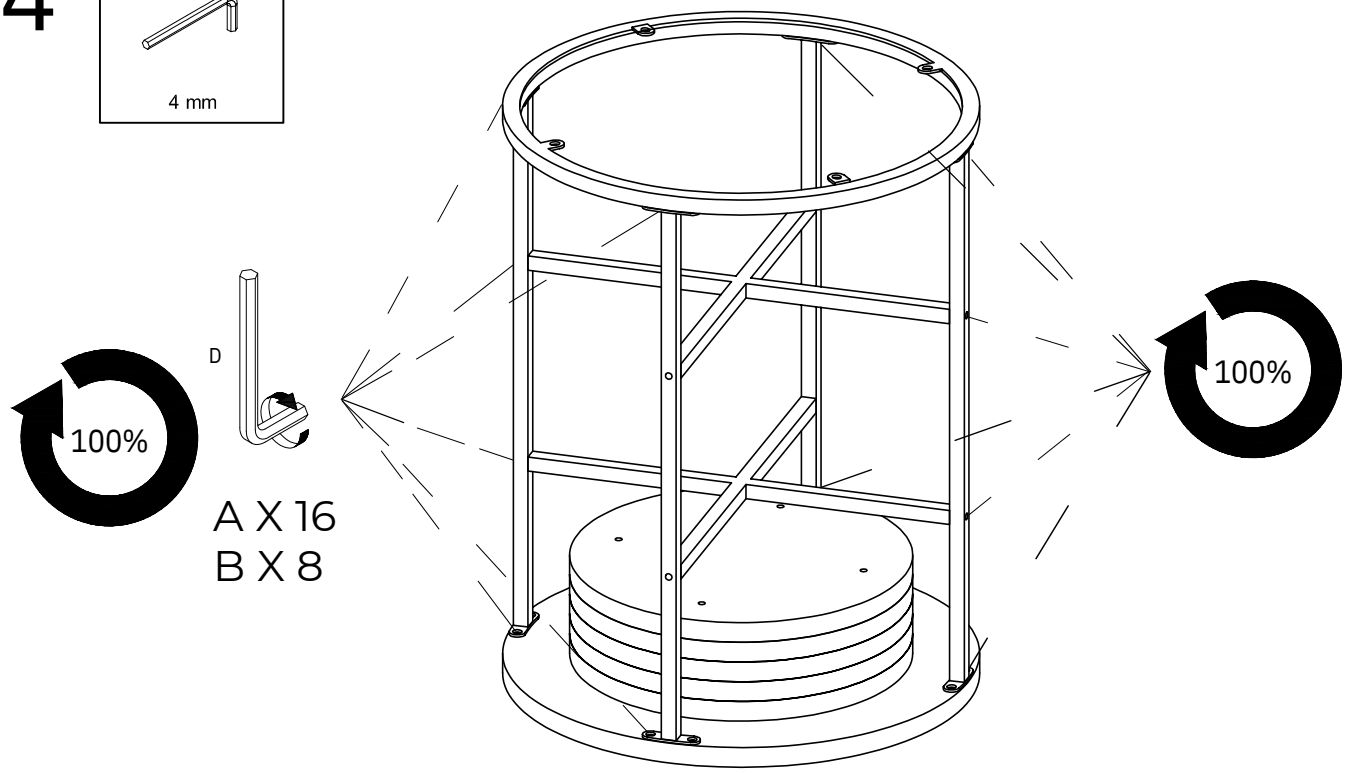

veke

5

C x 8
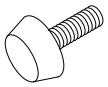
M6/Ø16x15

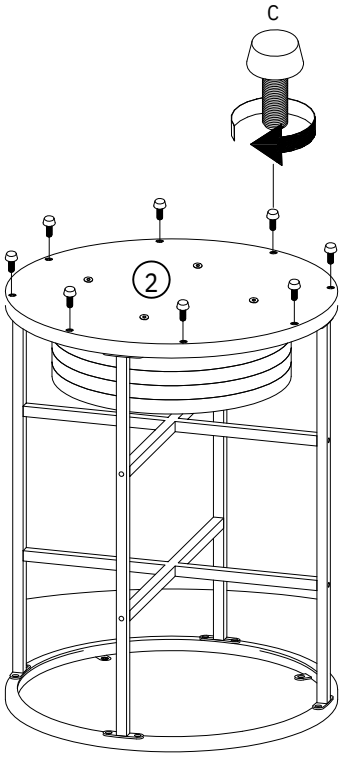

6

A x 4	D x 1
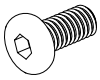	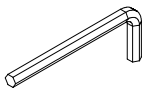
M6 x15 mm	4 mm

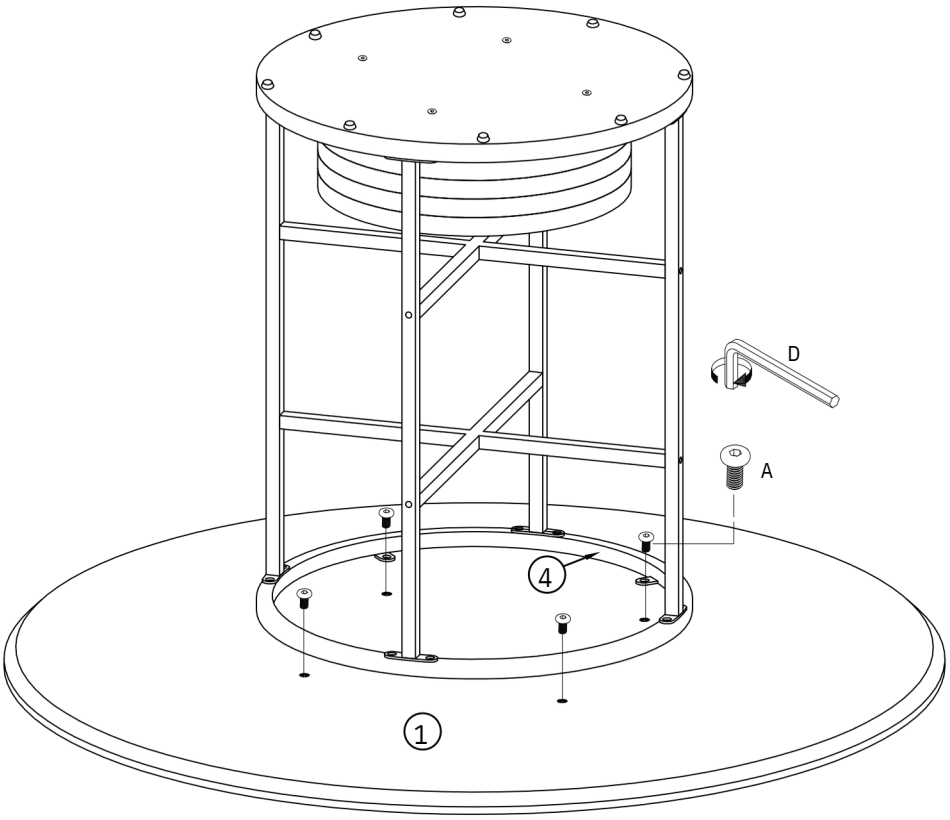

veke

7

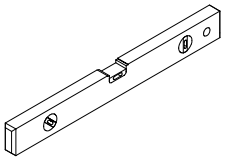

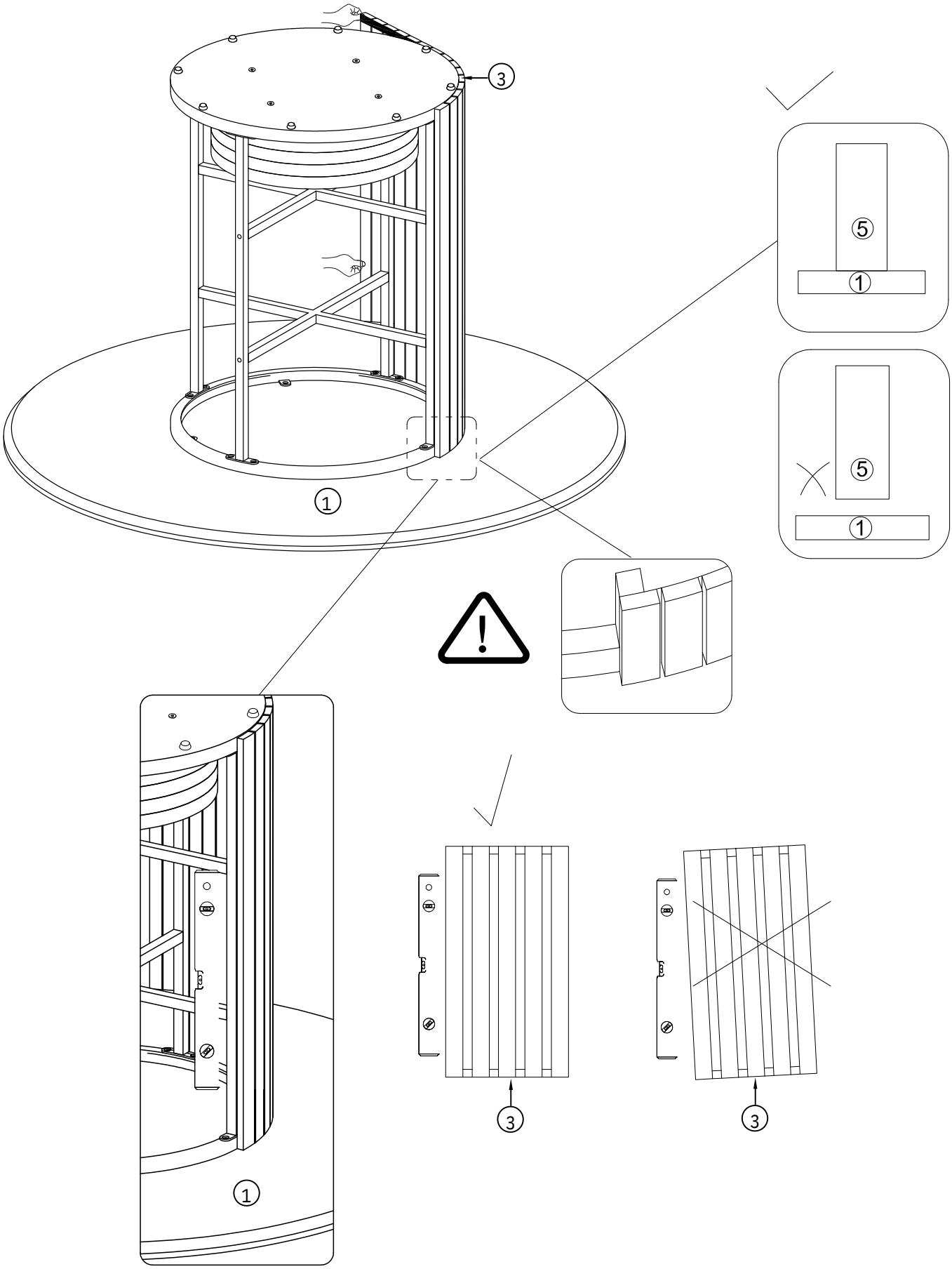

veke

8

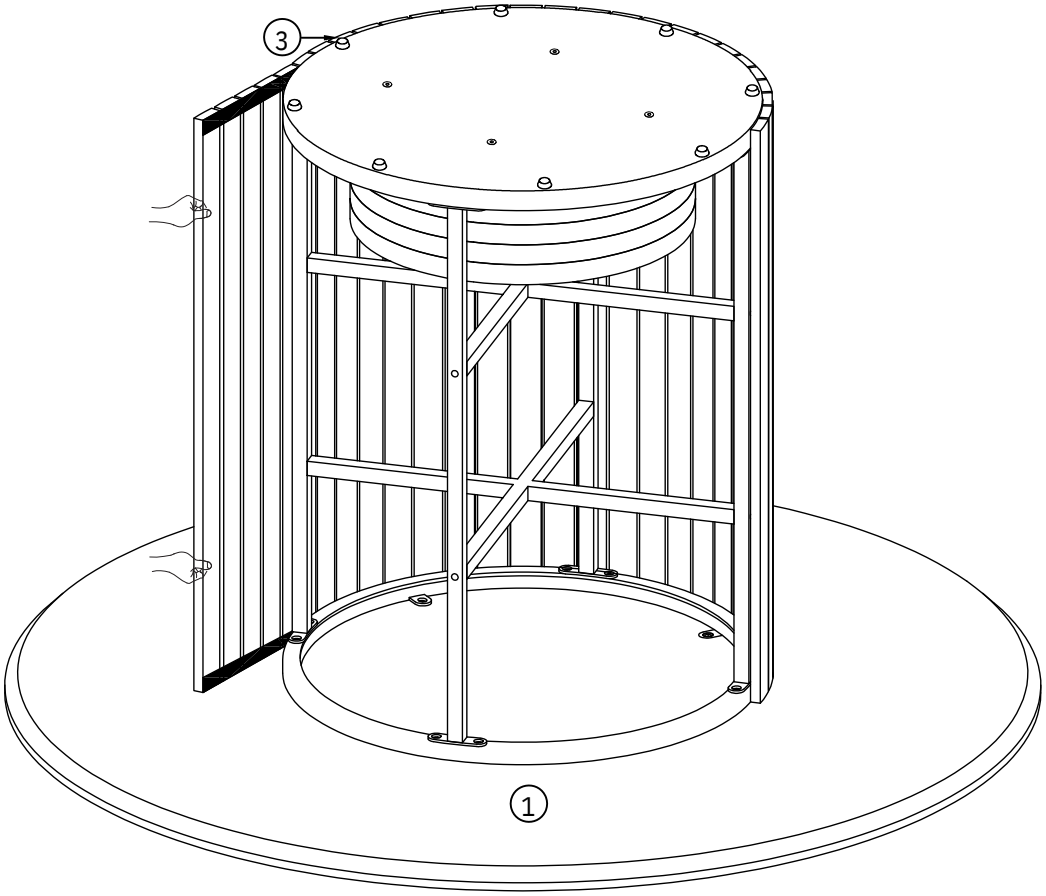

9

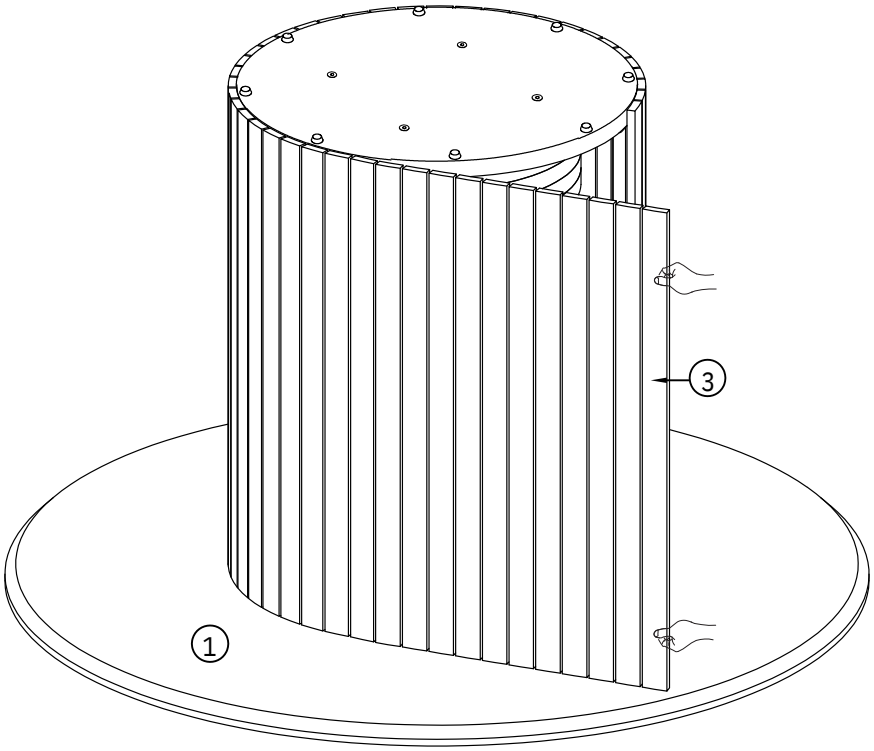

veke

10

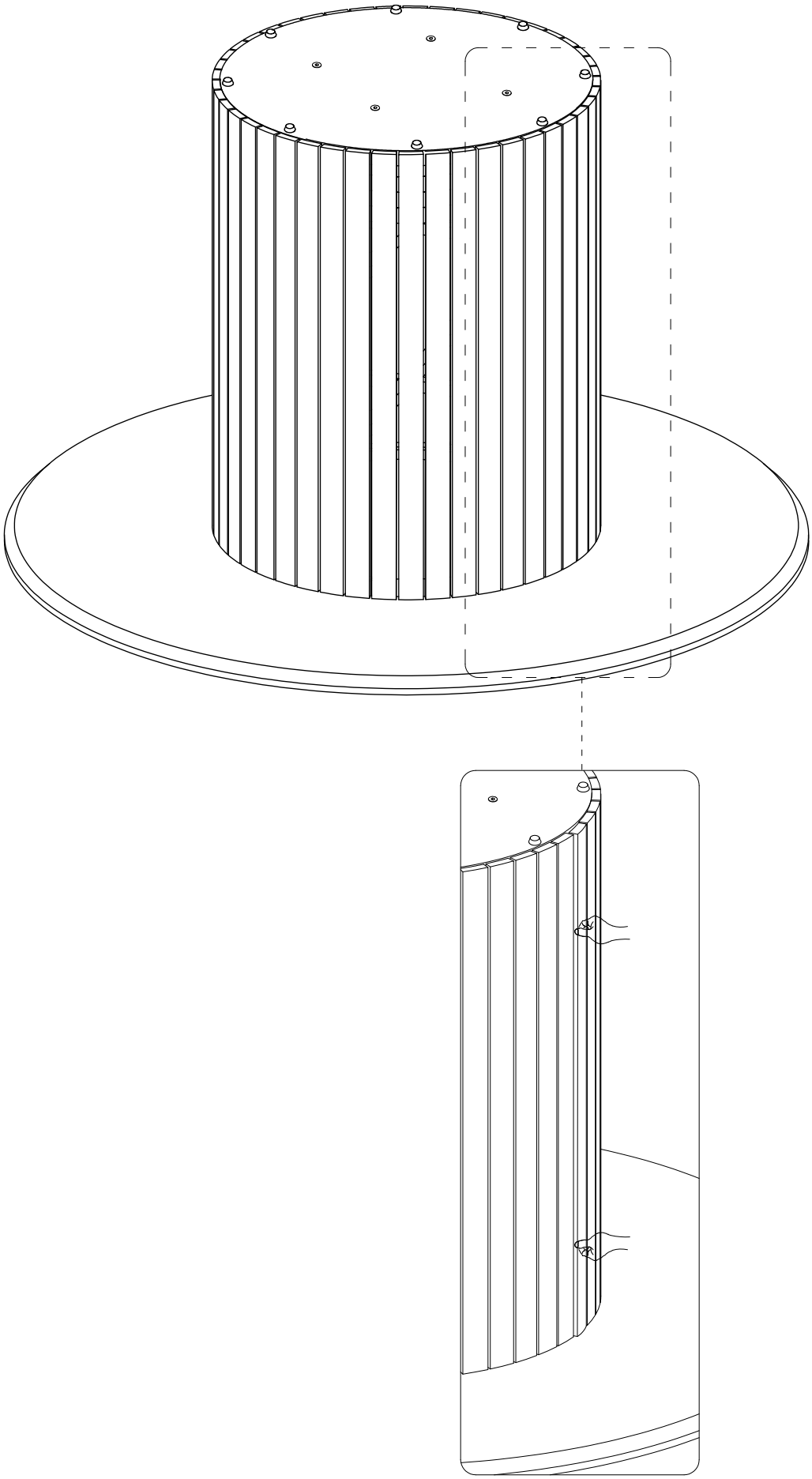

veke

11

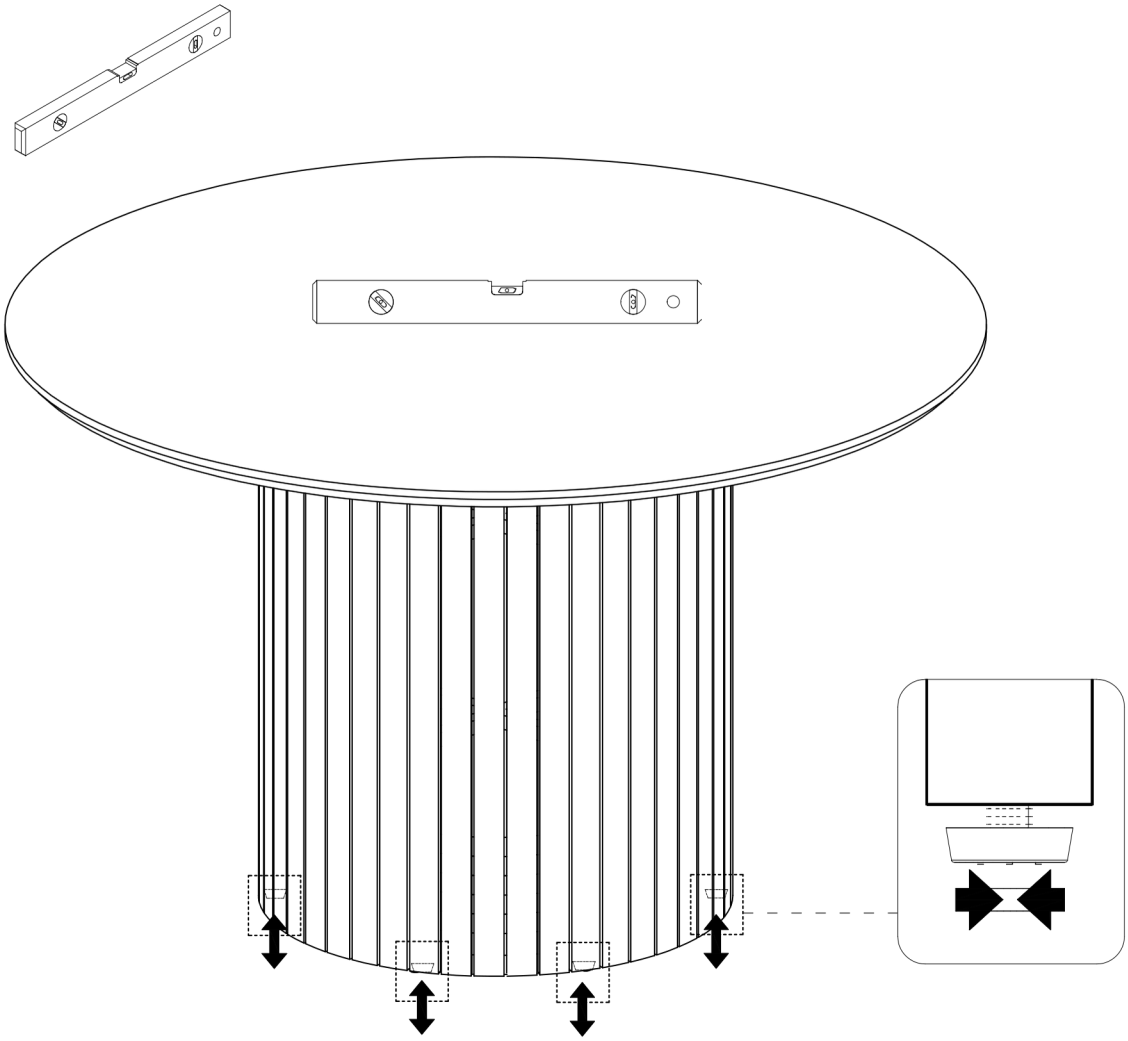

12

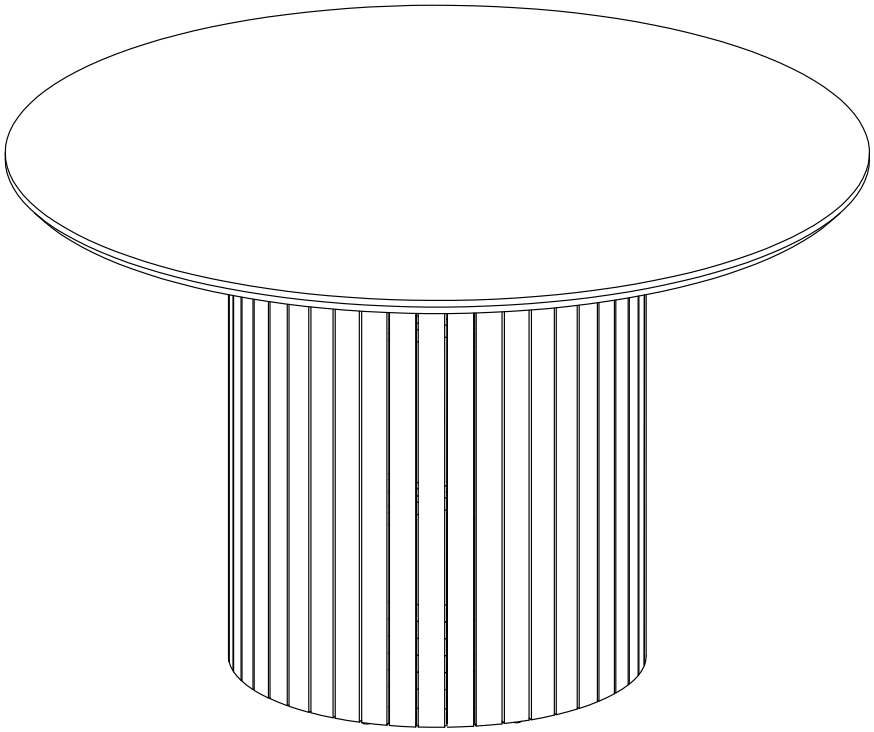

veke