Alessio sohvapöytä

Kokoamisohje

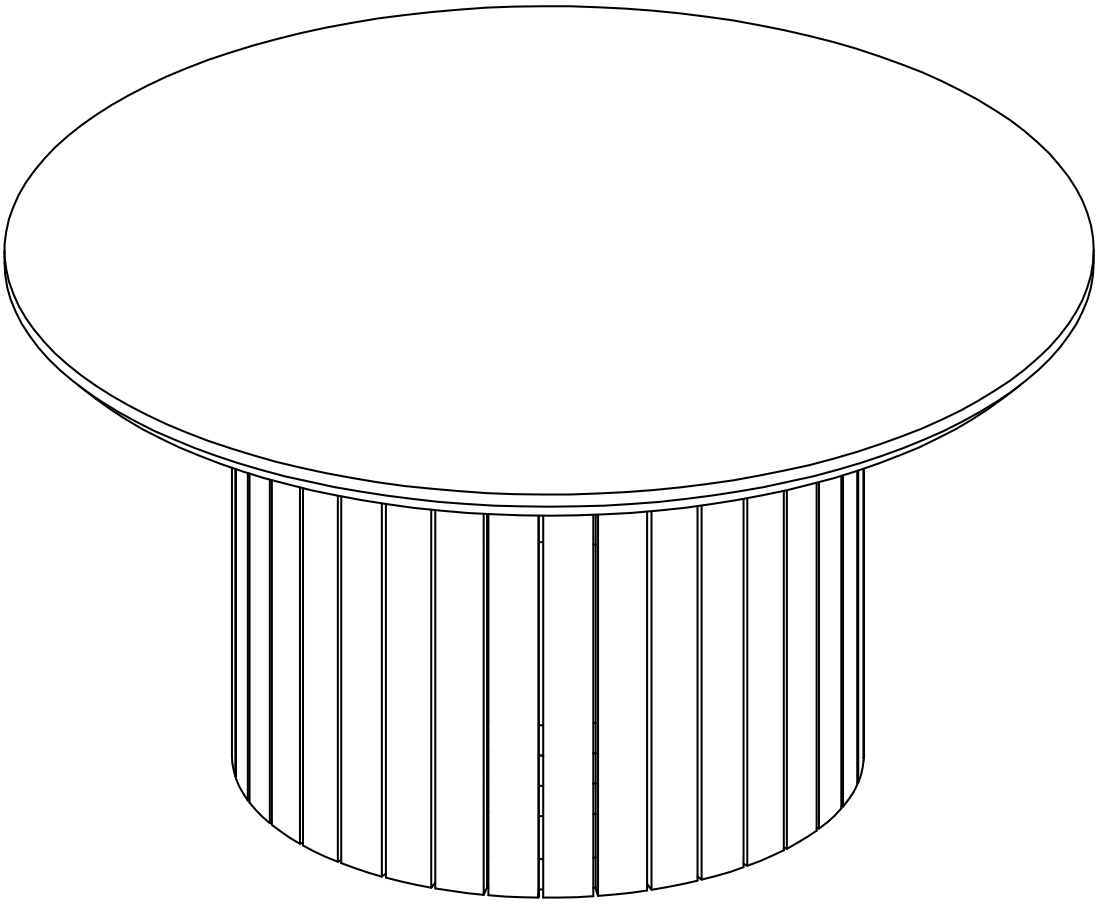

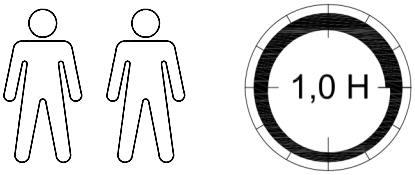

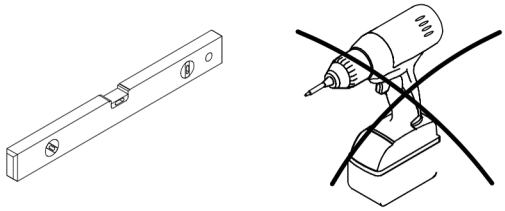

08/09/2022

veke

			√
①	1	Ø800x25 mm	
②	1	Ø440x20 mm	
③	3	345x20x20 mm	

			√
④	1	Ø440x100 mm	
⑤	2	700x388x12 mm	

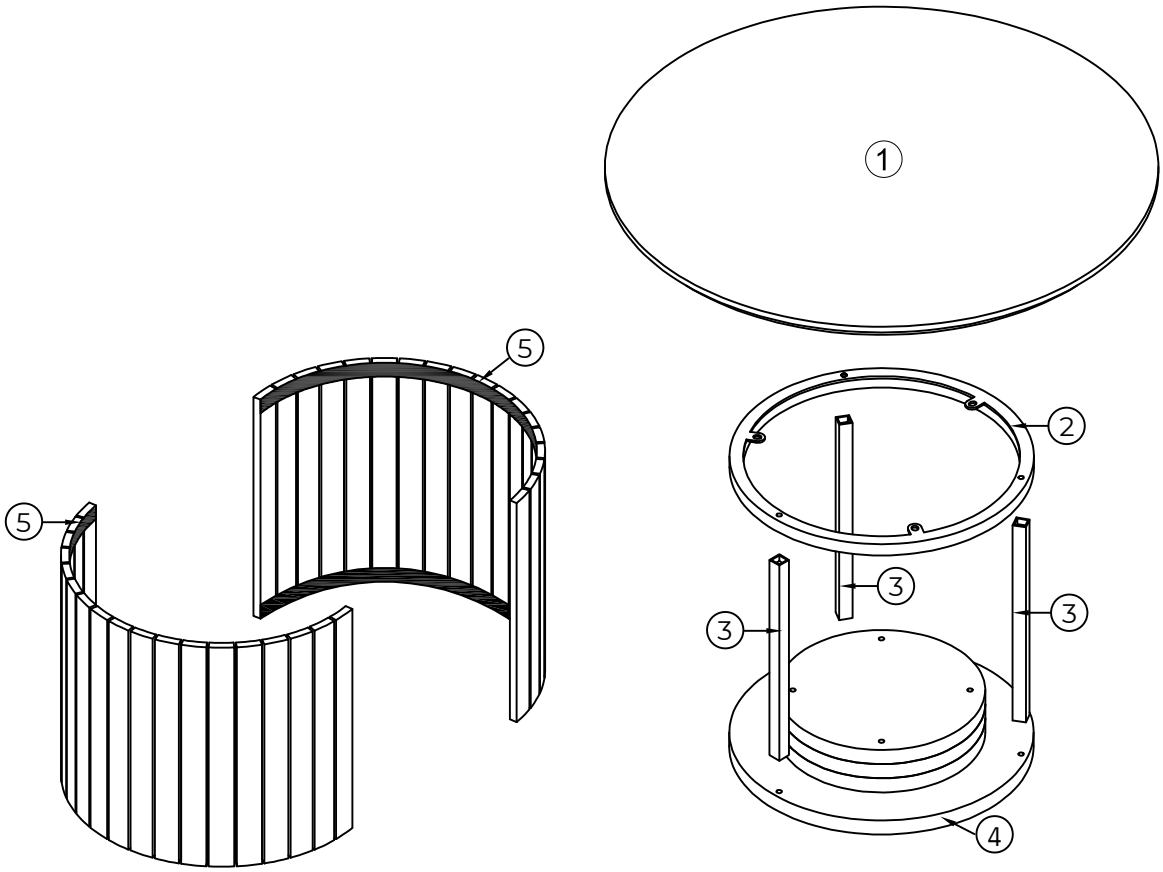

A x 3	B x 6	C x 8	D x 1
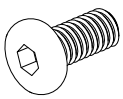	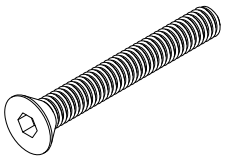	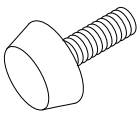	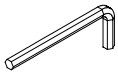
M6x15 mm	M6 x 40 mm	M6/Ø16x15	4 mm

veke

1

B x 3	D x 1
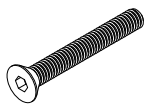	
M6 x 40 mm	4 mm

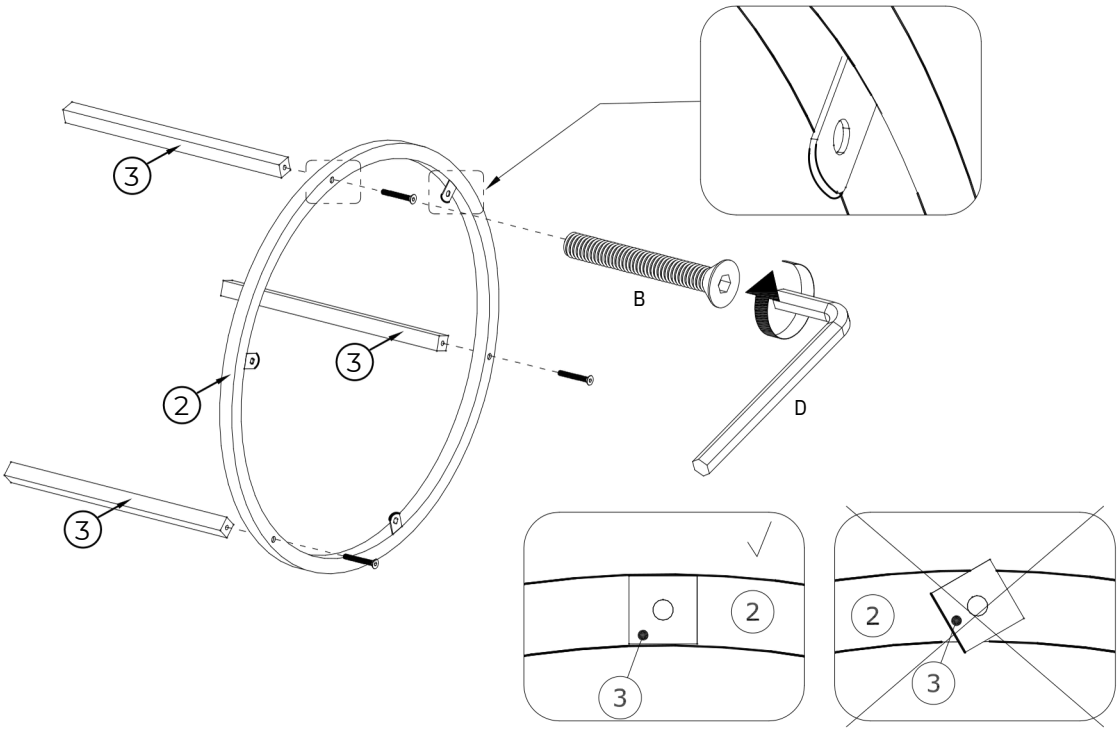

2

C x 8
M6/Ø16x15

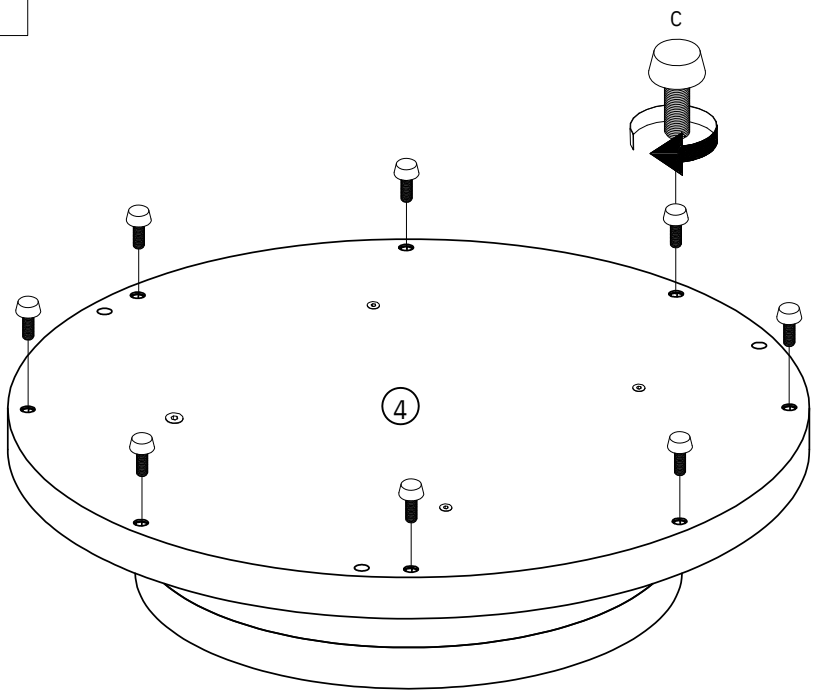

veke

3

B x 3	D x 1
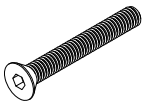	
M6 x 40 mm	4 mm

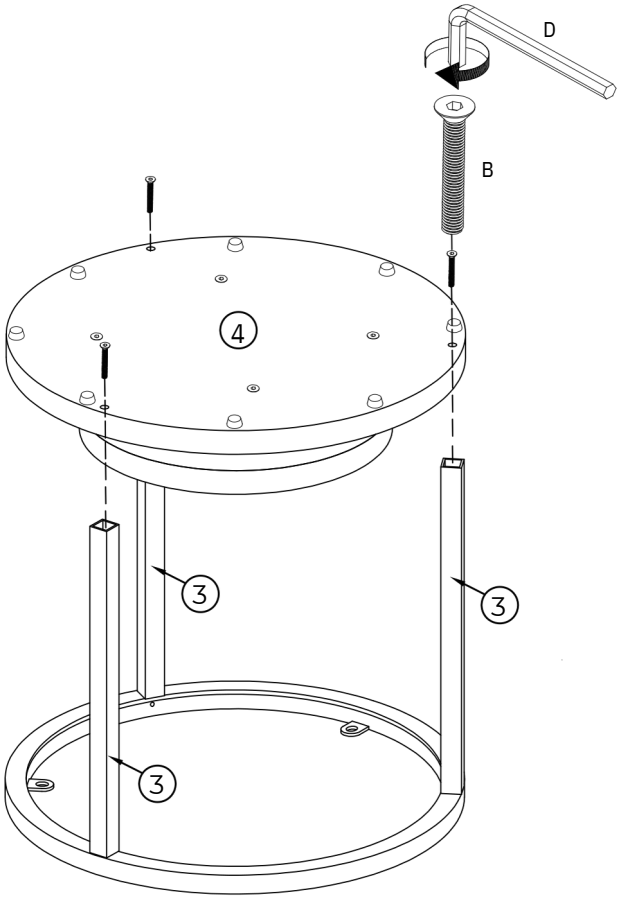

4

A x 3	D x 1
M6 x 15 mm	4 mm

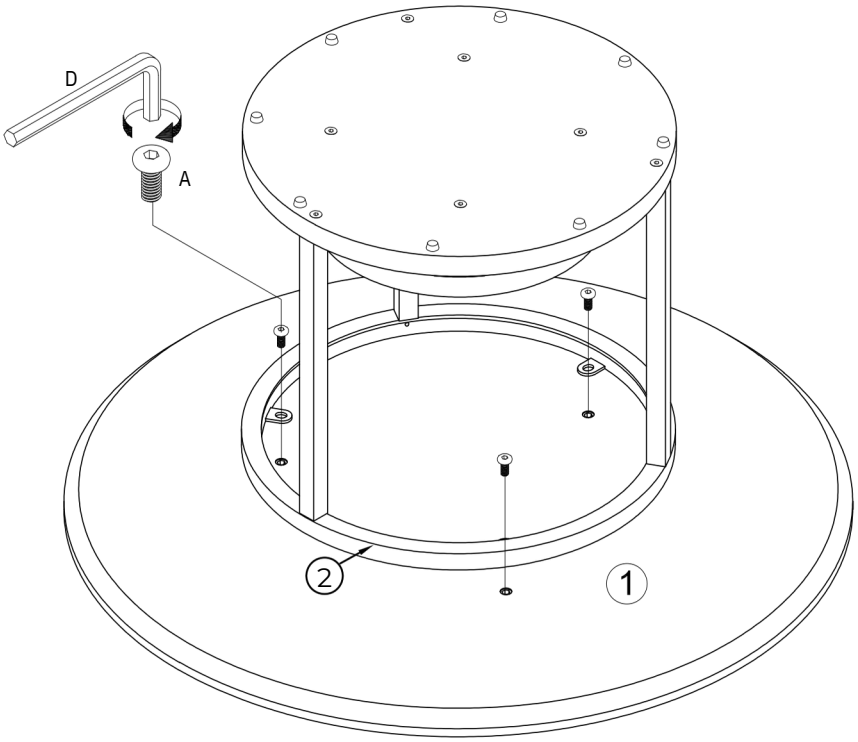

veke

5

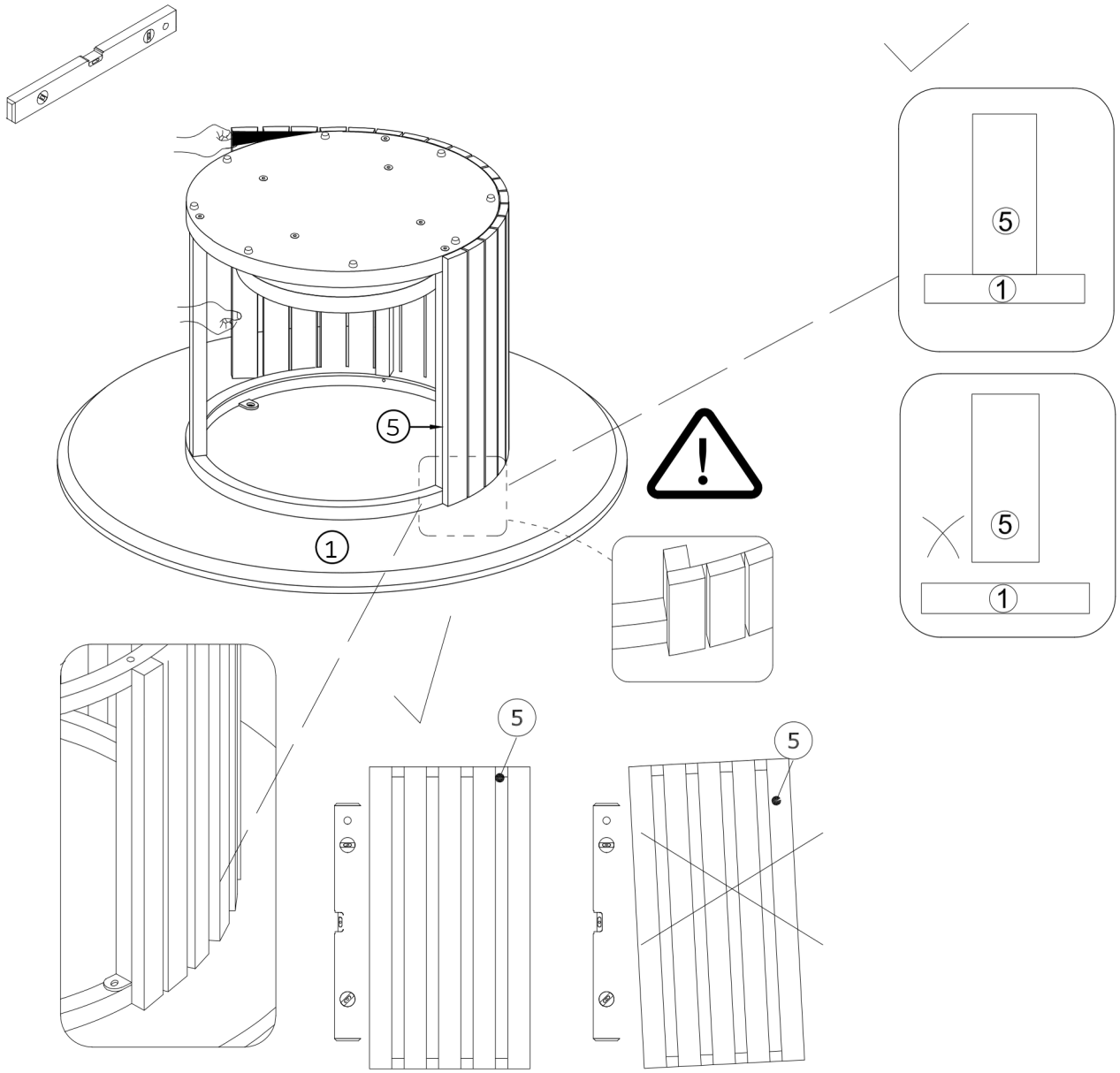

6

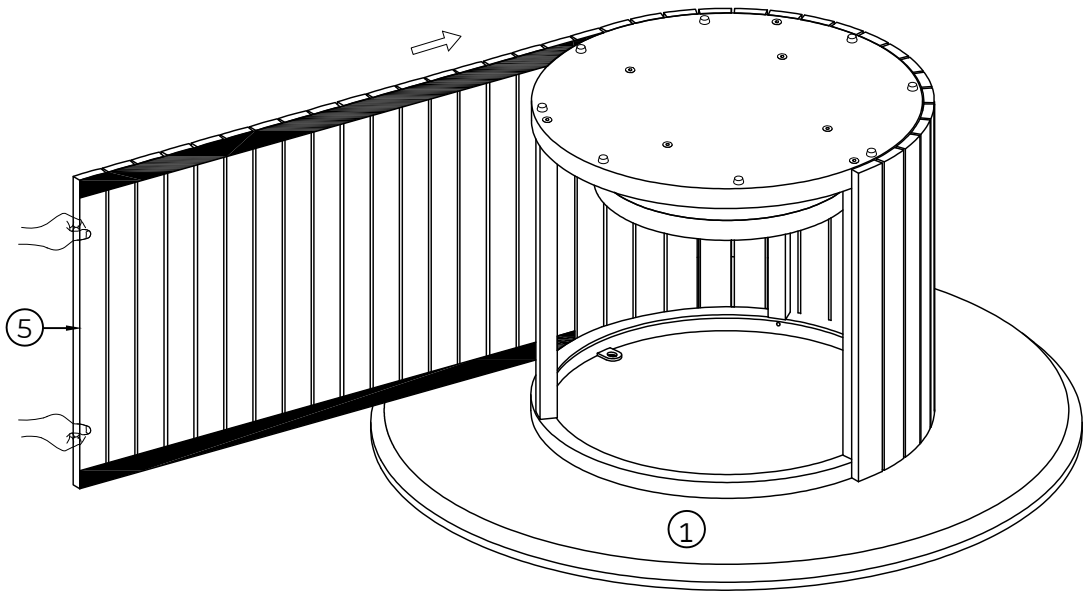

veke

7

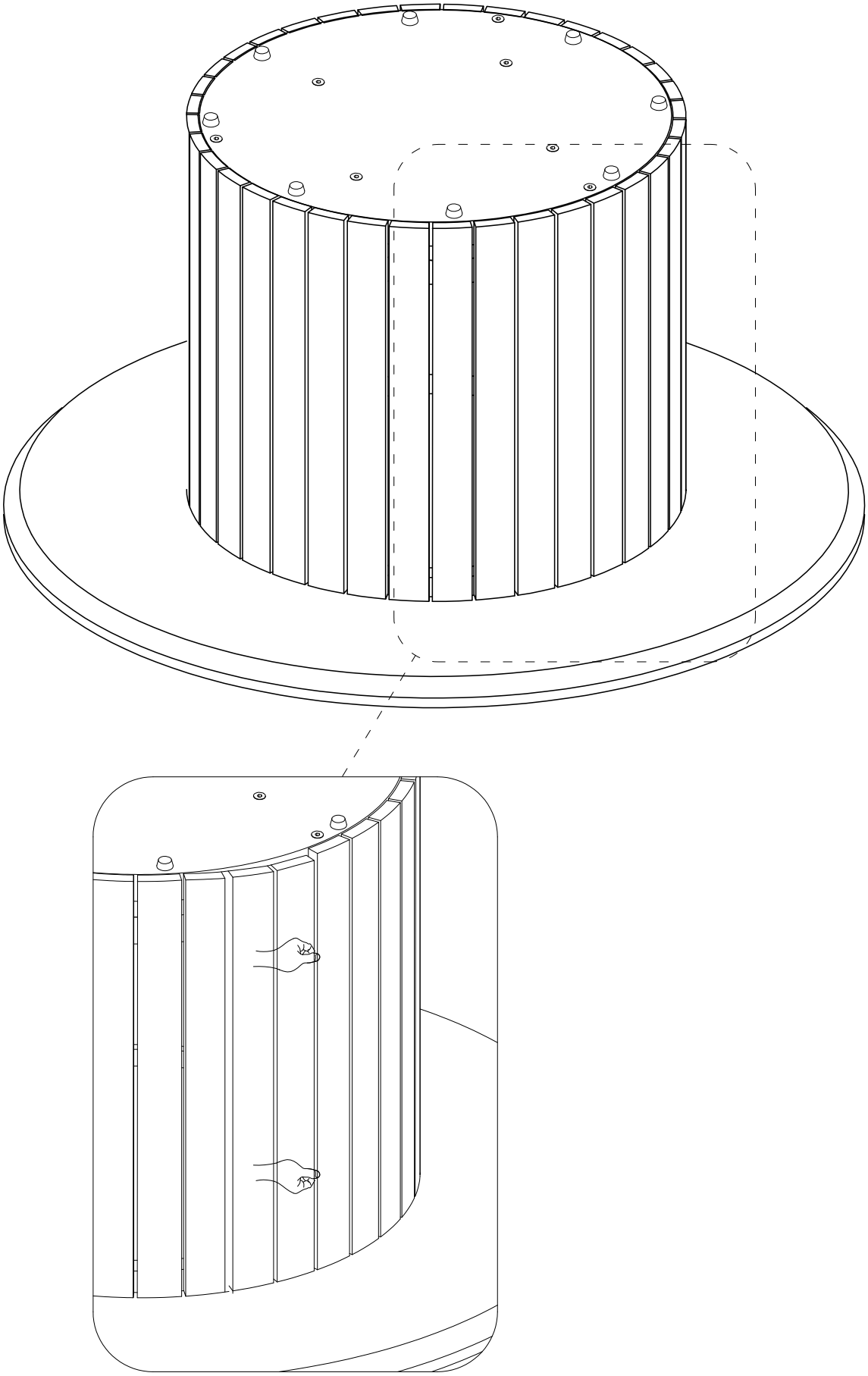

veke

8

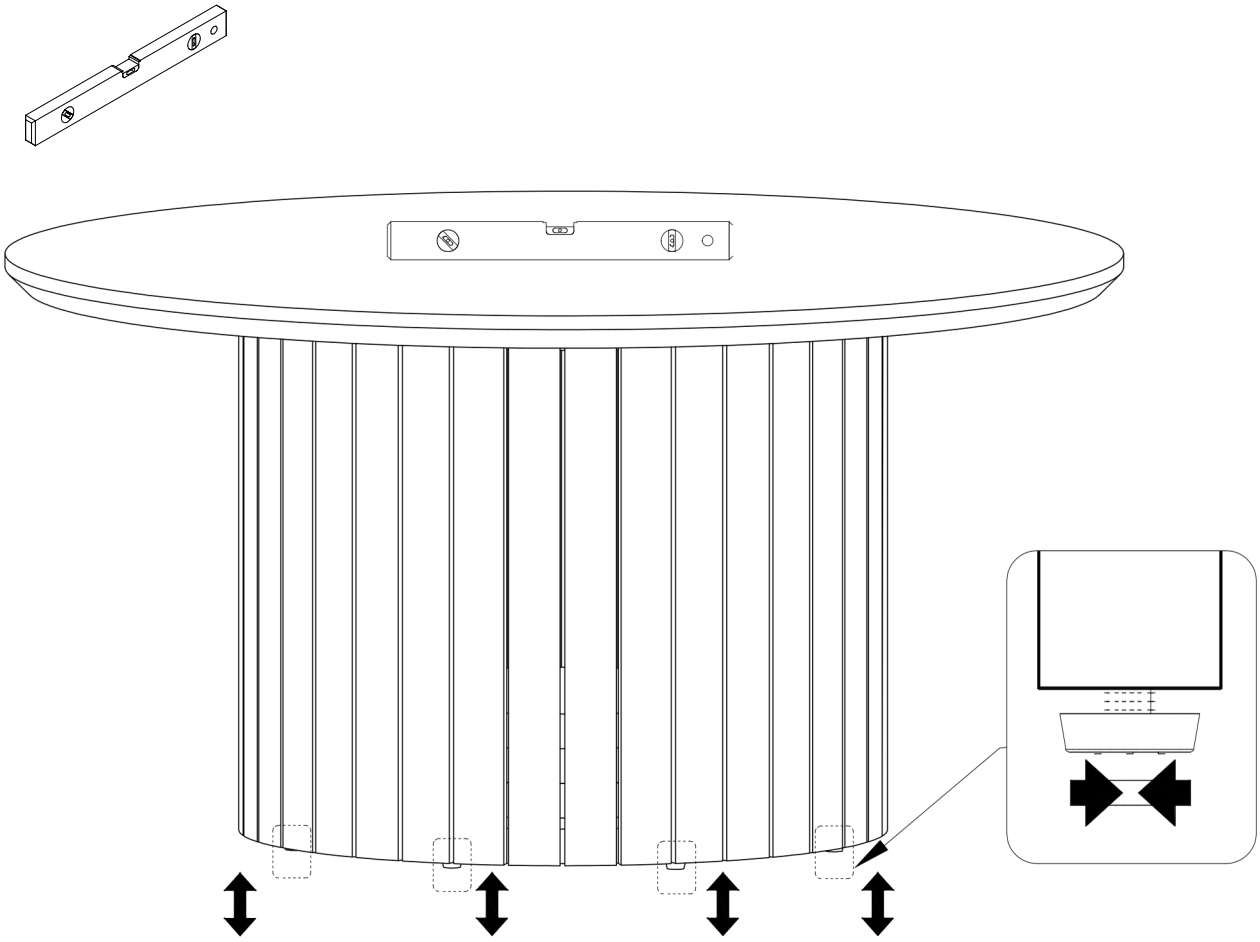

9

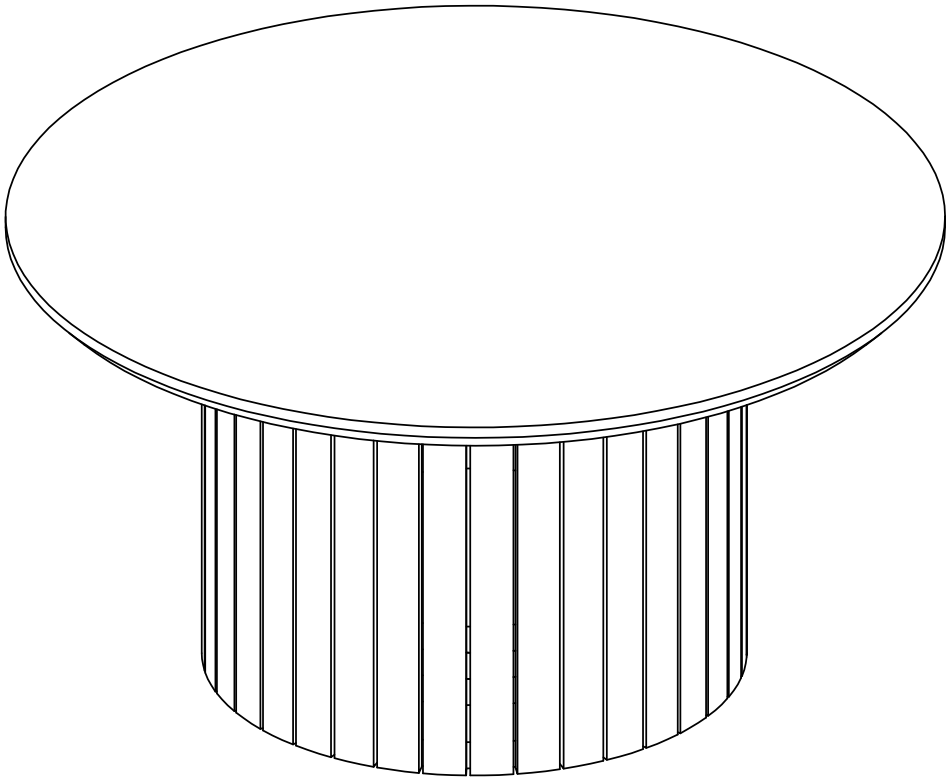

veke