A 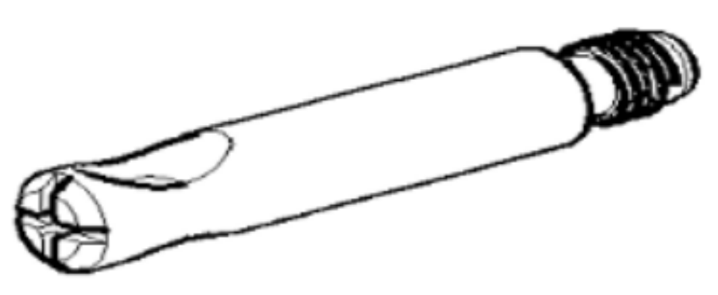 **x6**

B 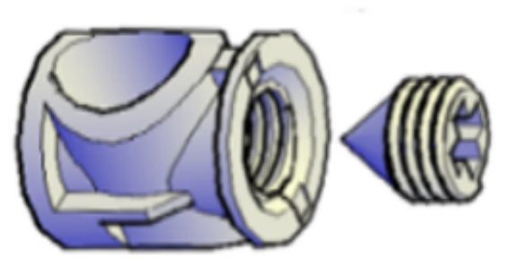 **x6**

C 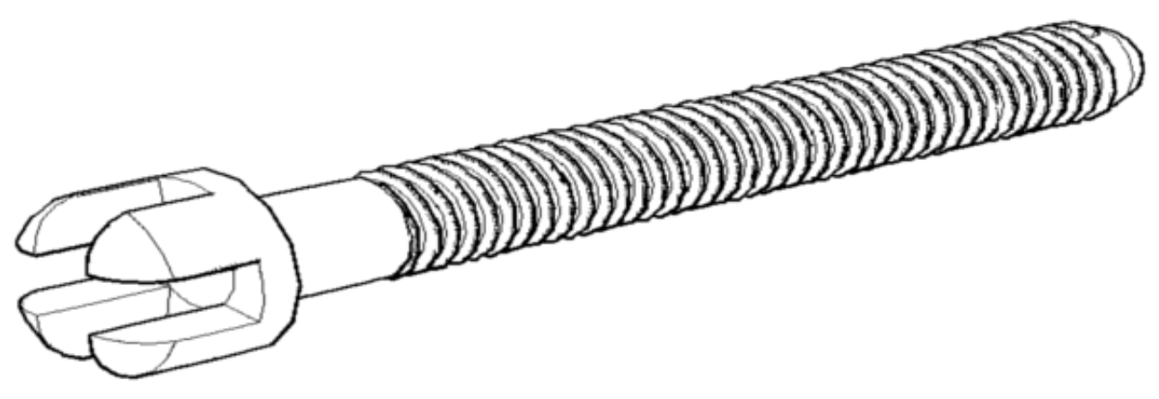 **x12**

D 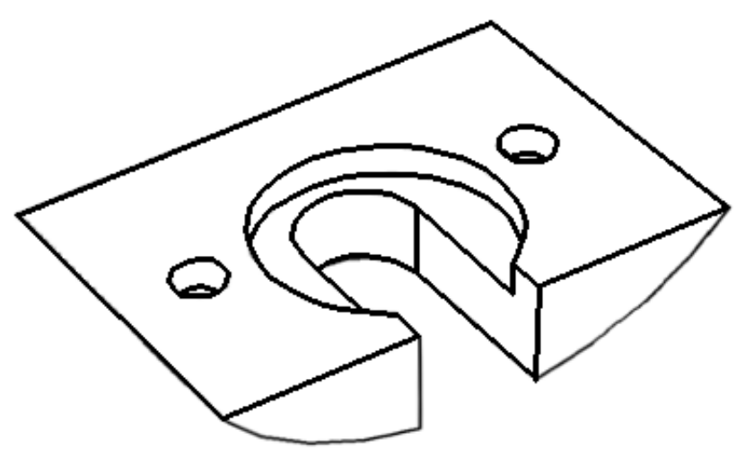 **x12**

E 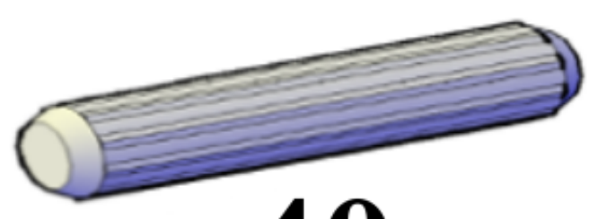 40mm **x8**

F 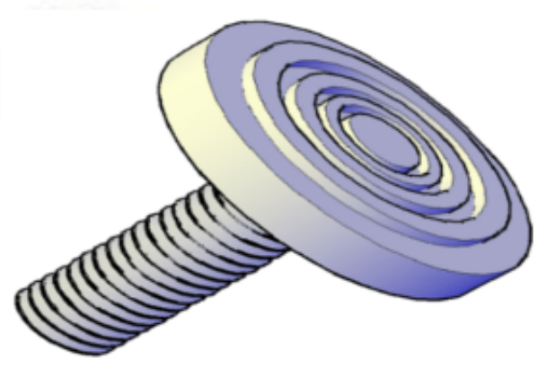 **x4**

G 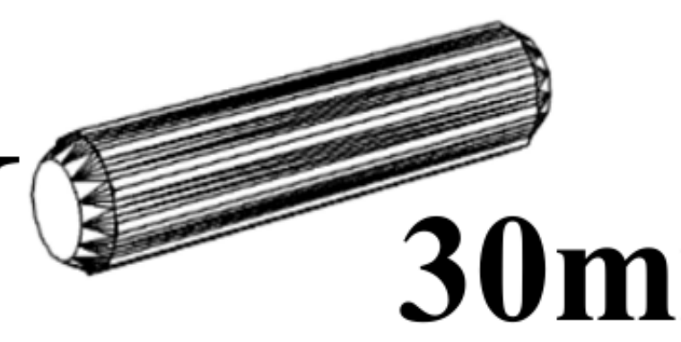 30mm **x12**

H 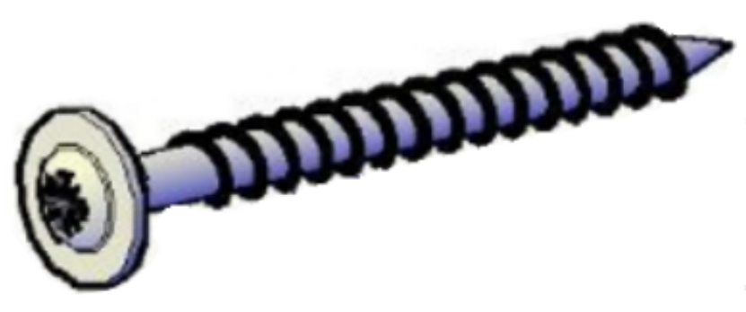 **x12**

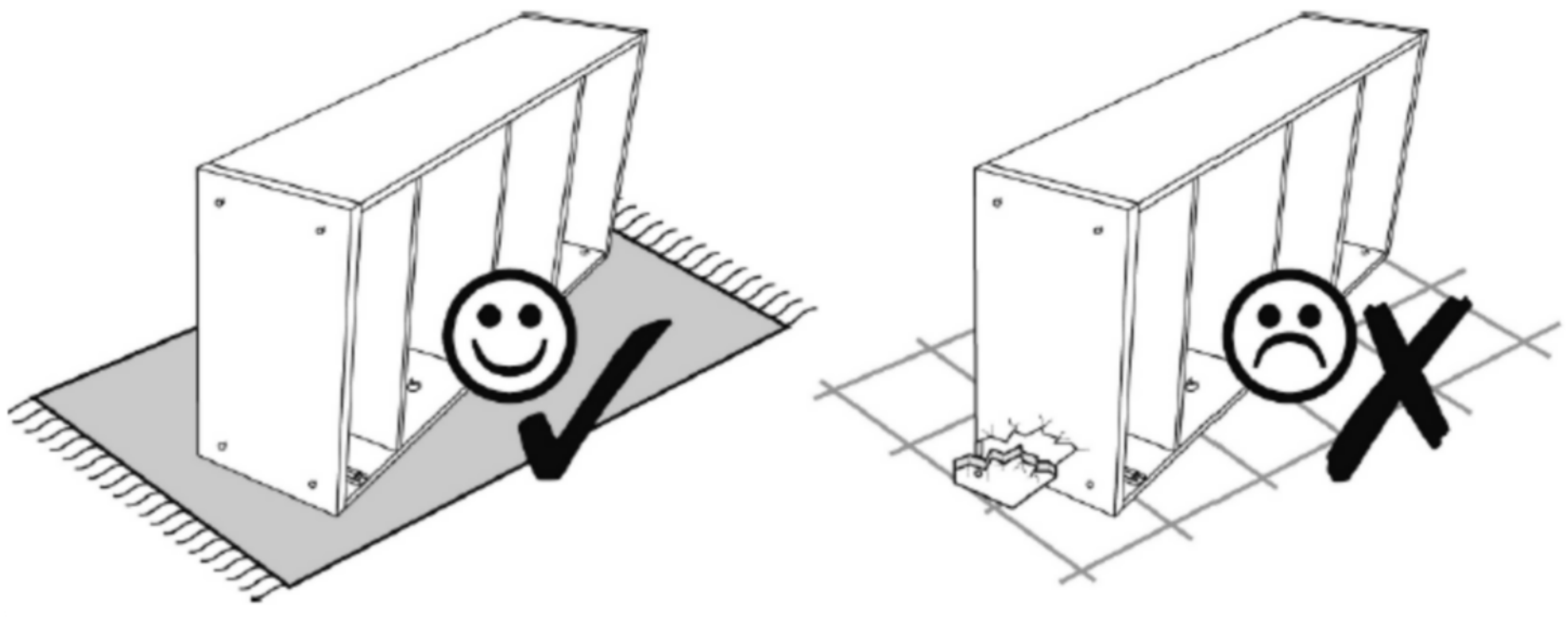

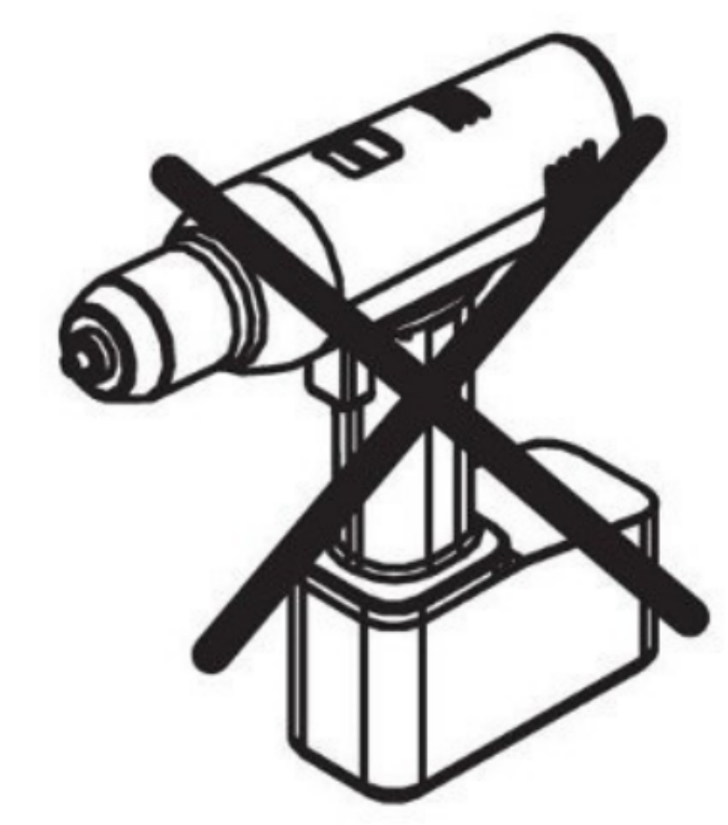

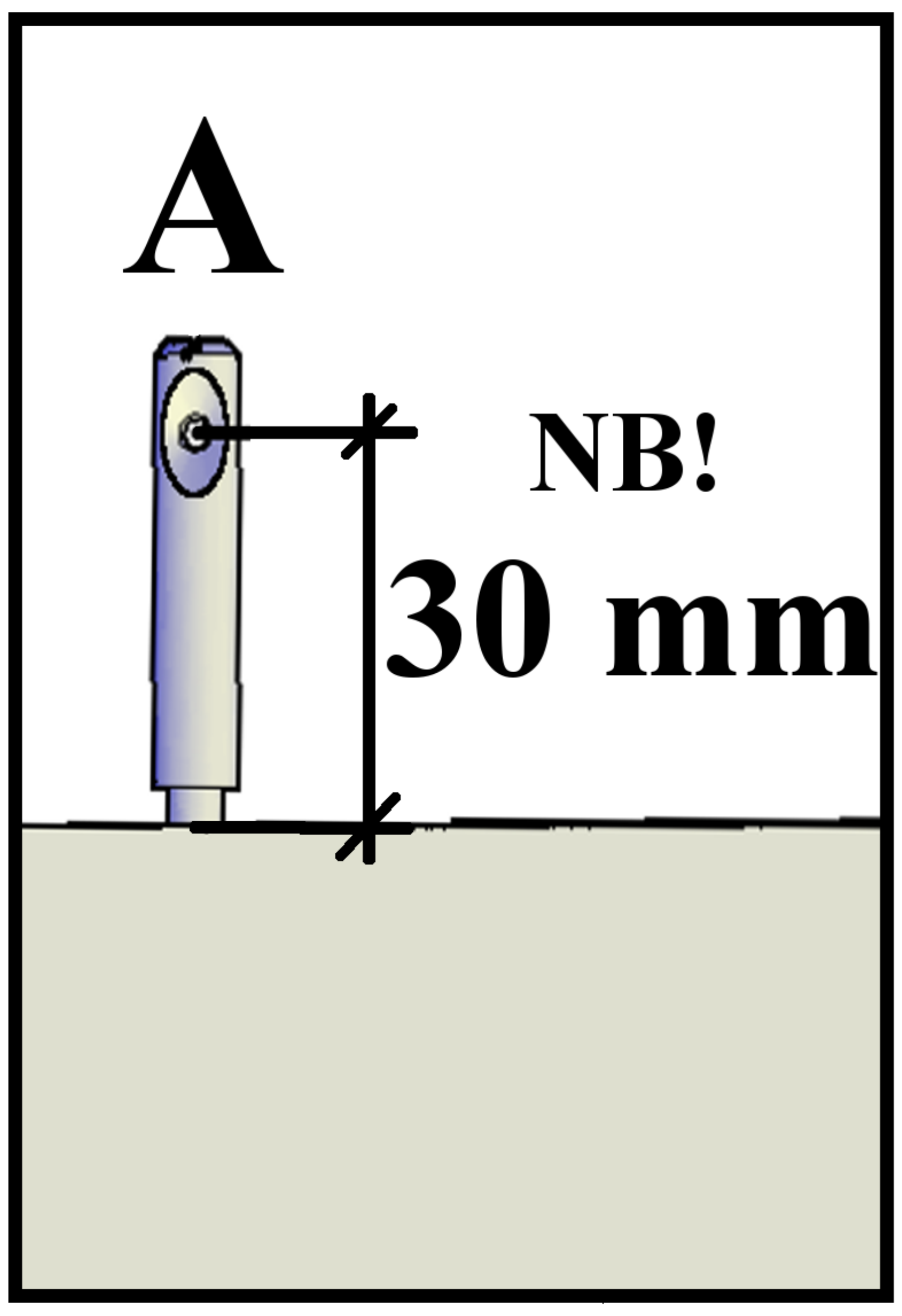

1.

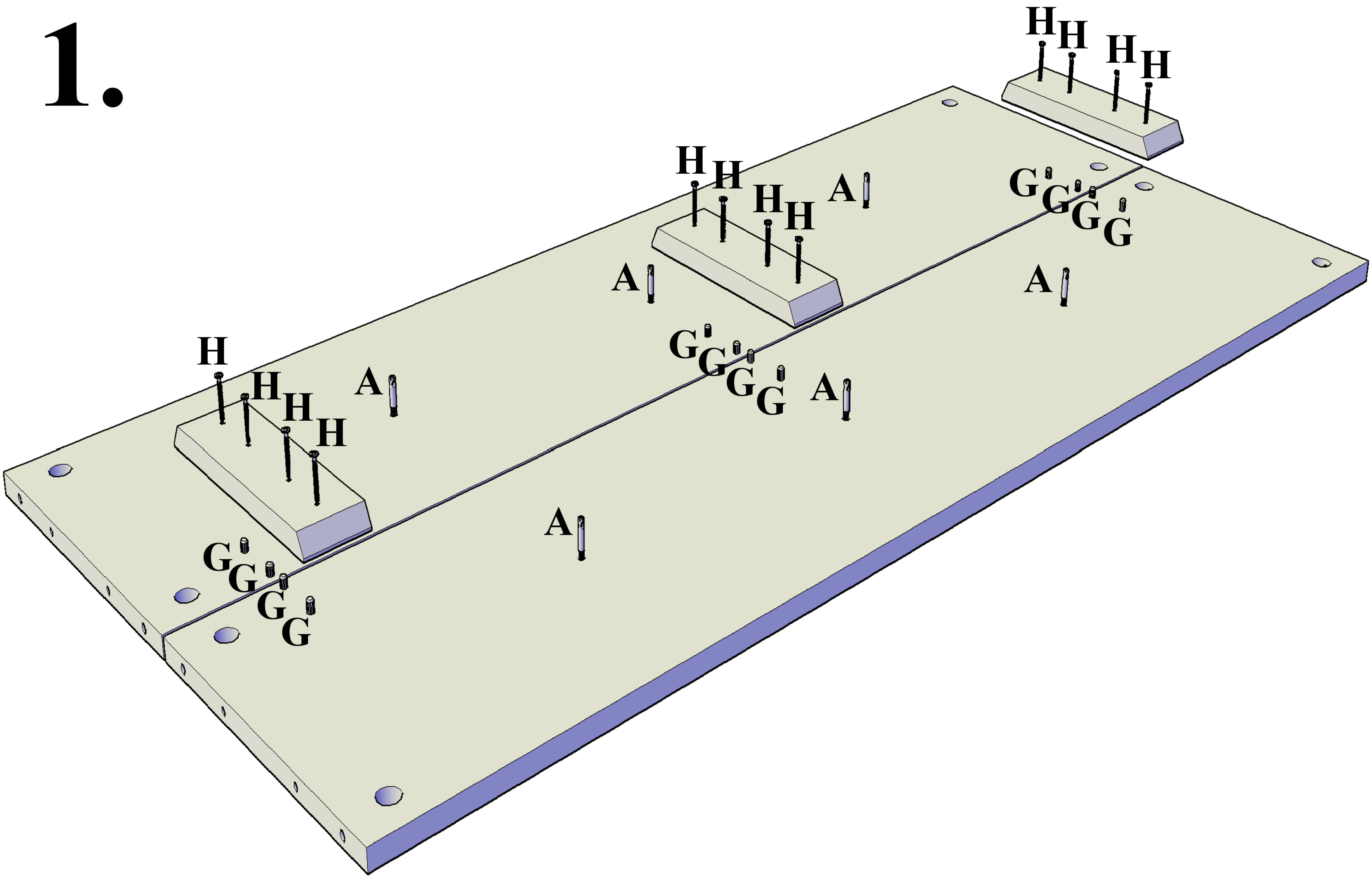
H H H H
H H H H A
A G G G G
A
H
H H H A
G G G G A
A
G G G G

2.

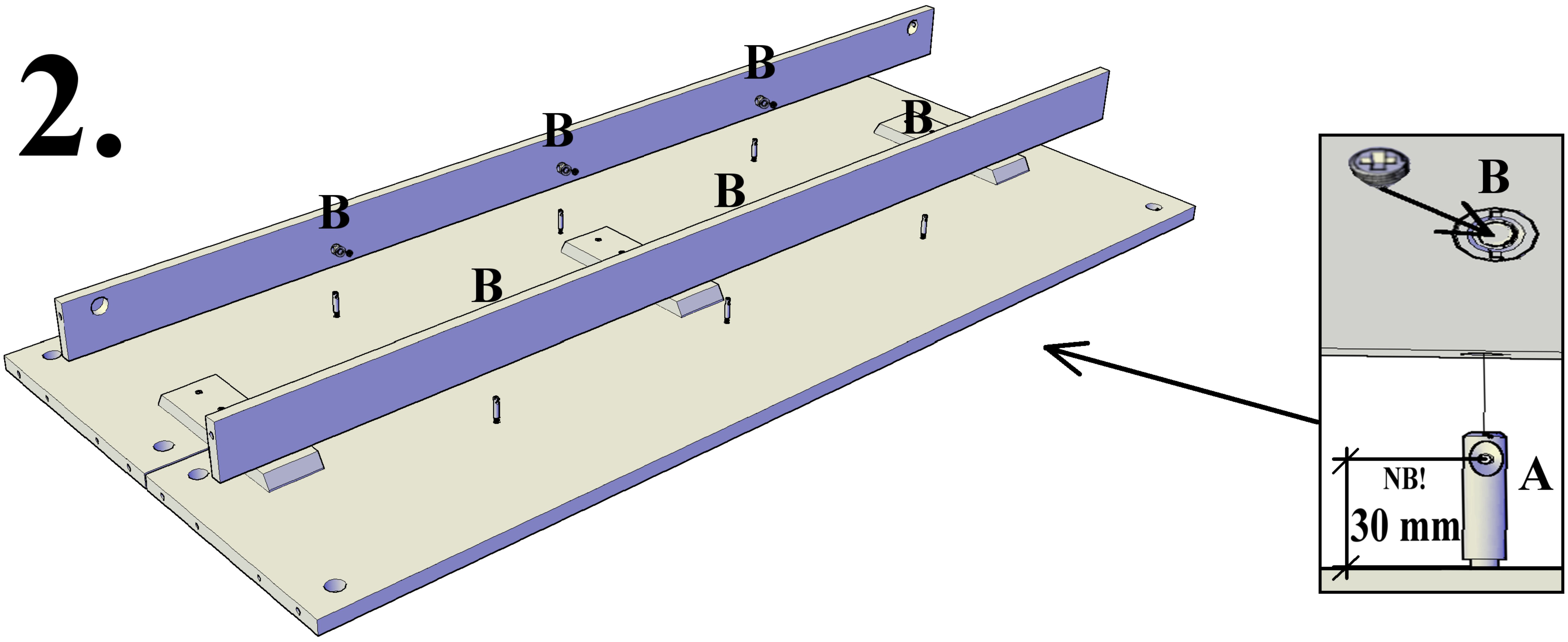
B
B
B
B
B
B
B
NB!
30 mm
A

3.

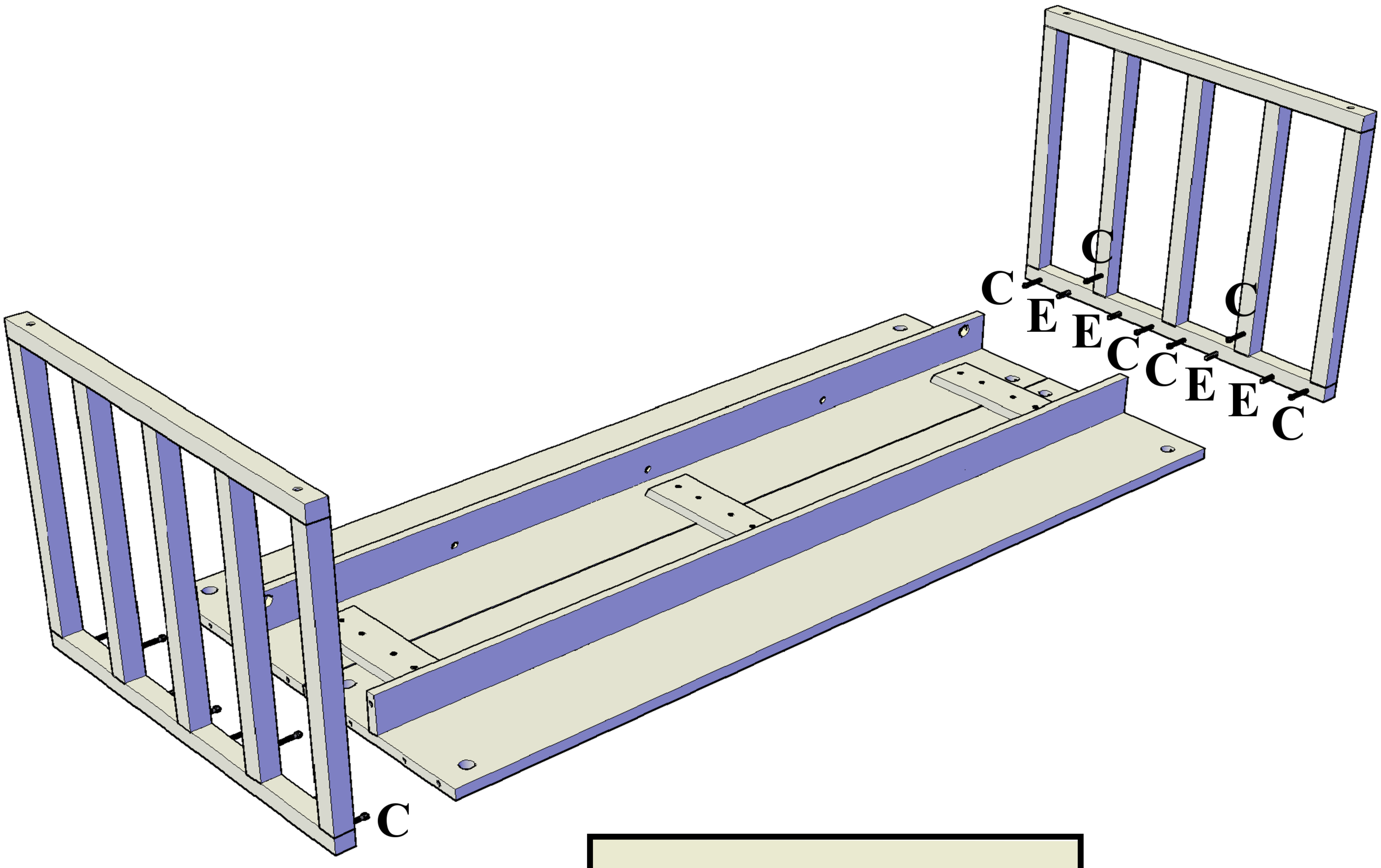
C
C
E
E
C
C
C
E
E
C
C

4.

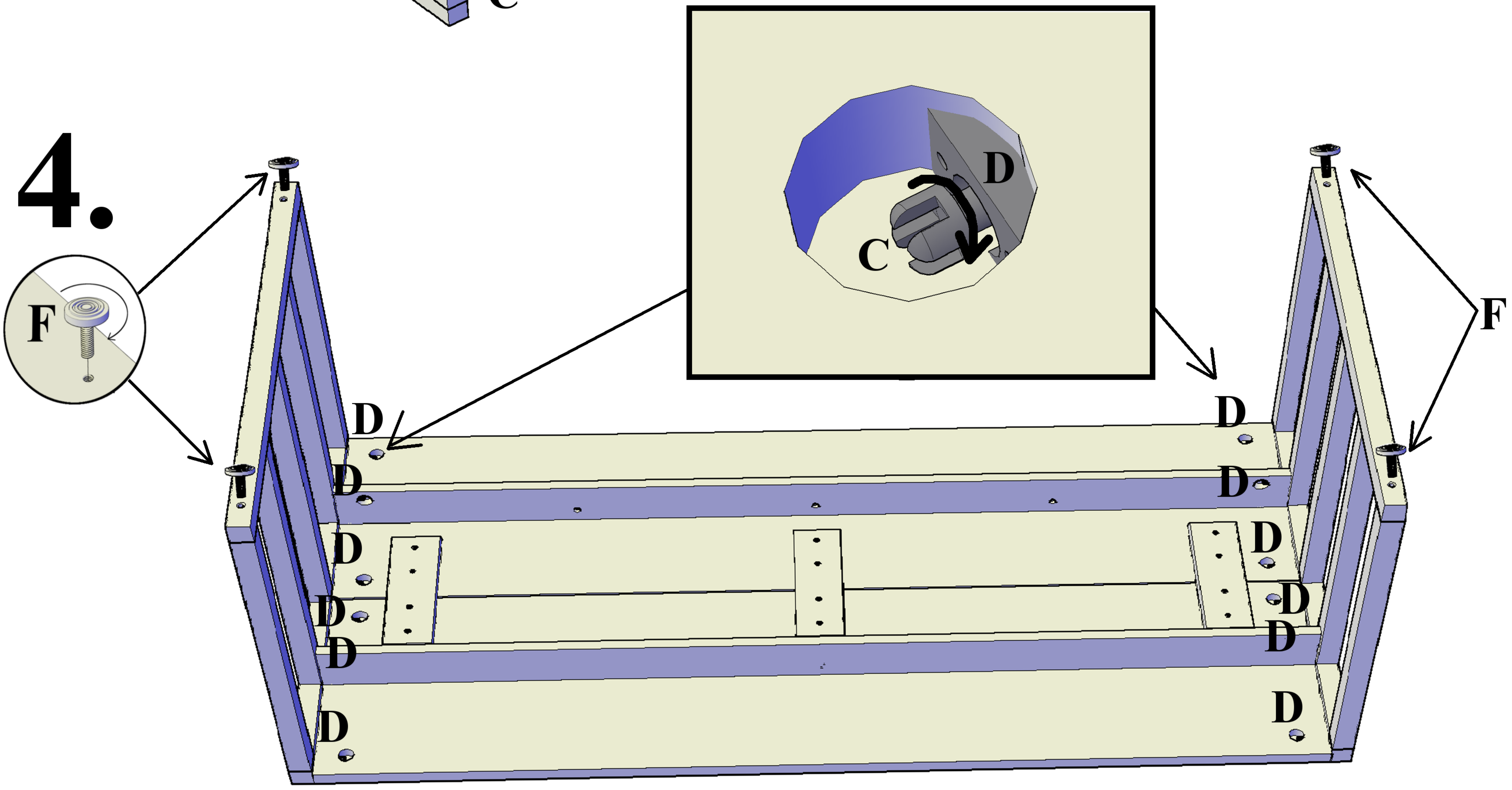
F
D
C
D
D
D
D
D
D
D
D
D
D
D
D
F