Kuusio avohylly
Kokoamisohje

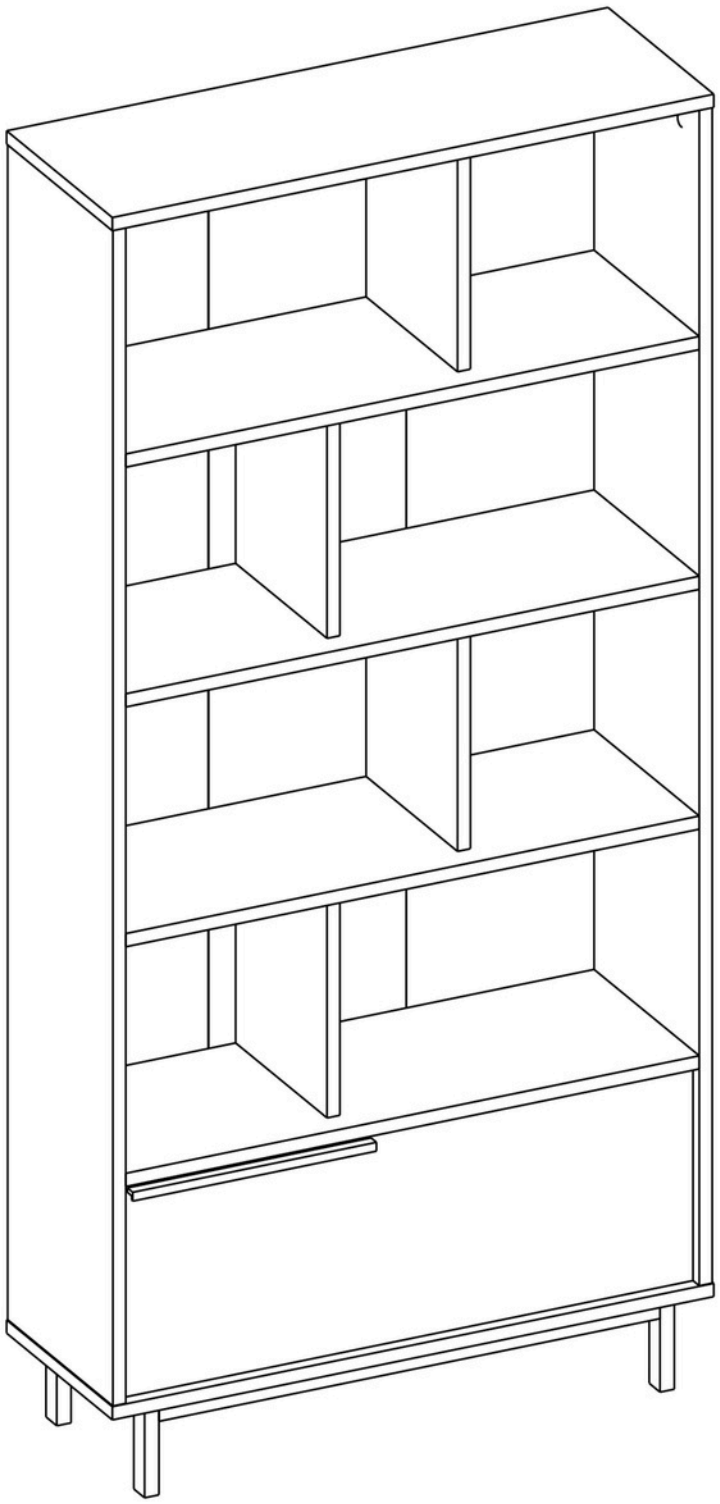

veke

 B0501 x24	 B0502 x24	 B0503 x40	 B0504 x24	 B0301 x8
 B1702 x4	 B0318 x38	 B0103 x2	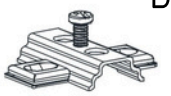 B0105 x2	 B0307 x2
 B0203 x1	 B0324 x6	 D0804 x2	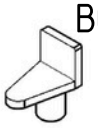 B0509 x1	

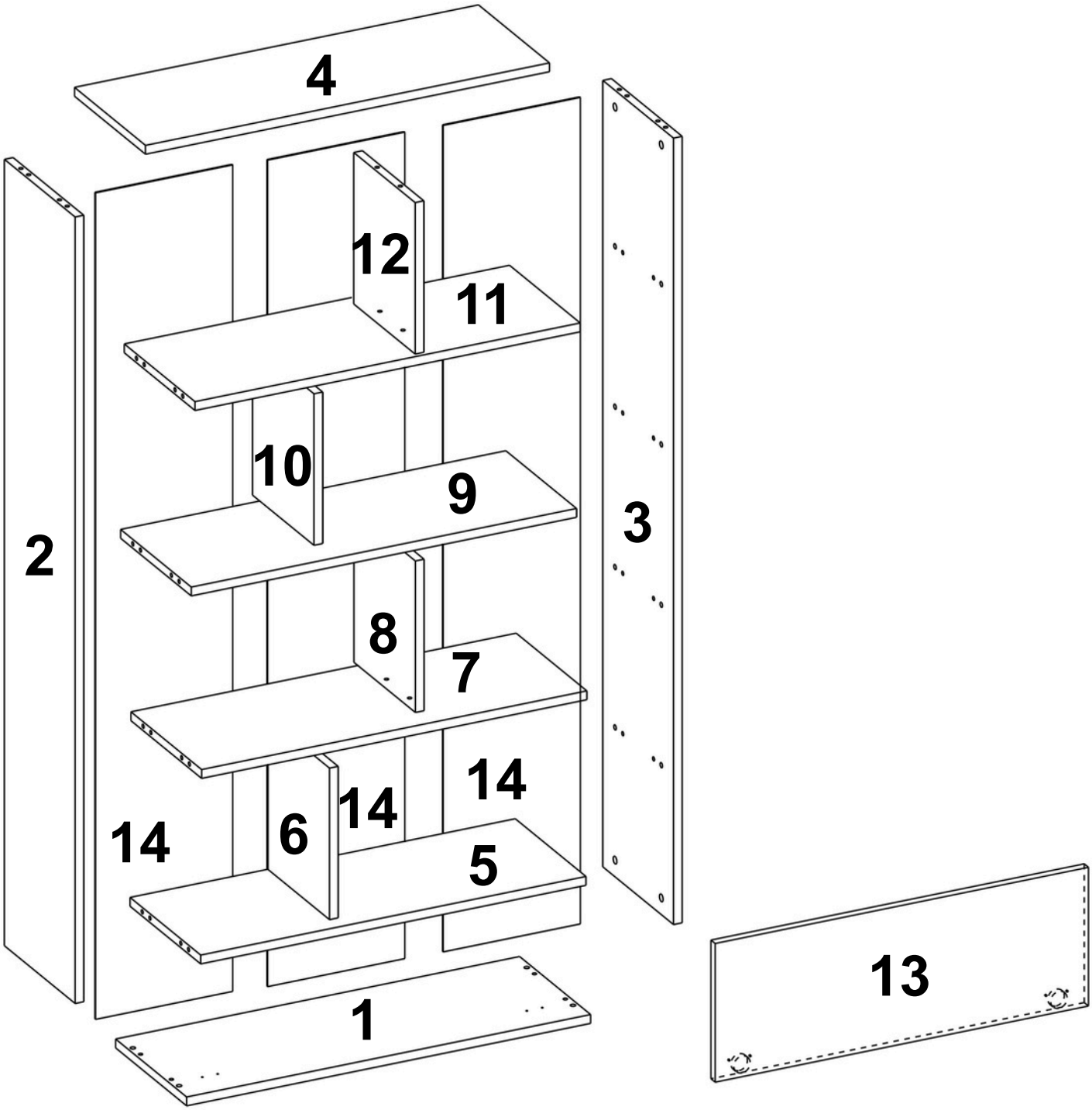

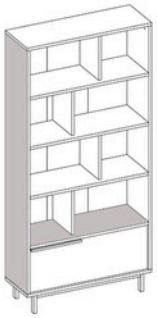

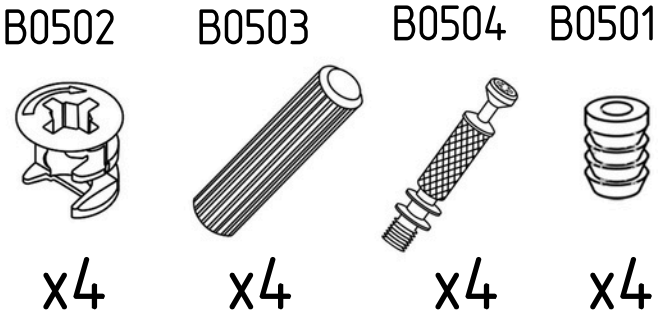
B0502
B0503
B0504
B0501
x4
x4
x4
x4

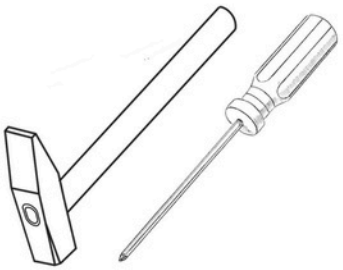

1

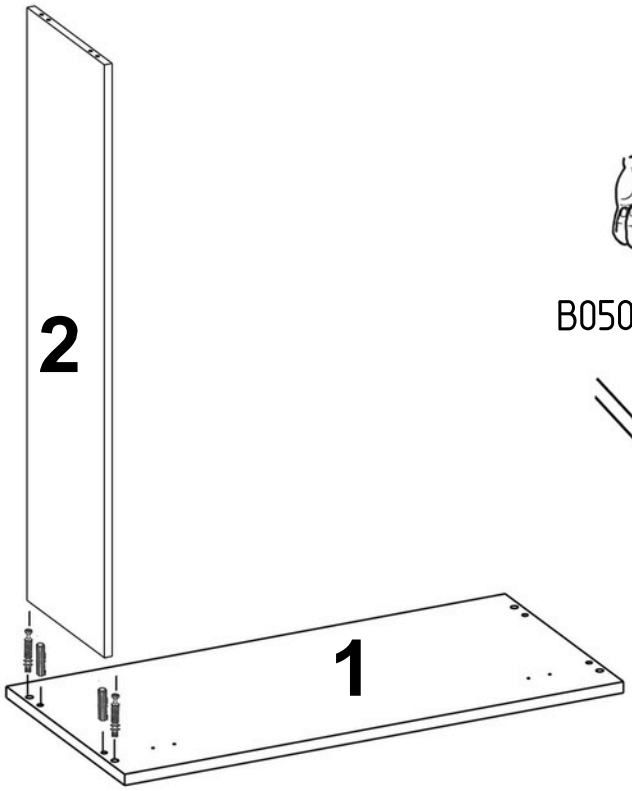
2
1

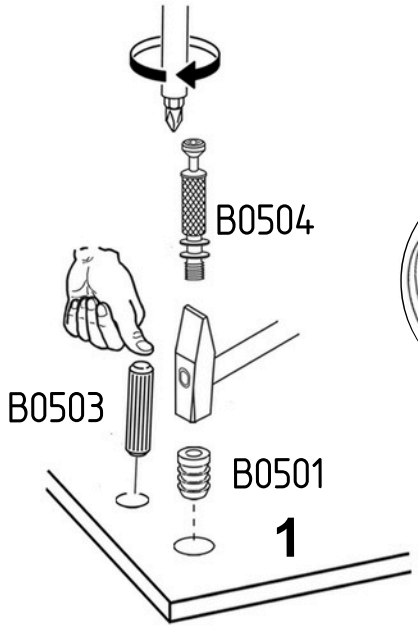
B0504
B0503
B0501
1

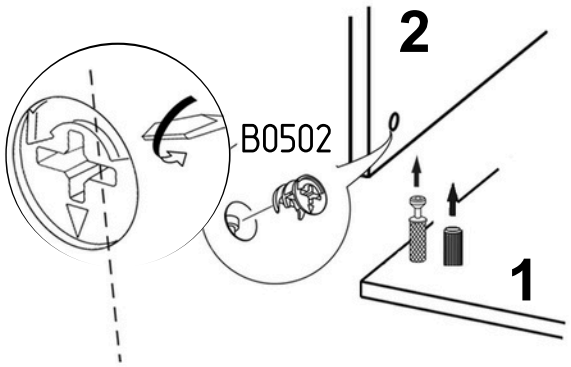
2
B0502
1

2

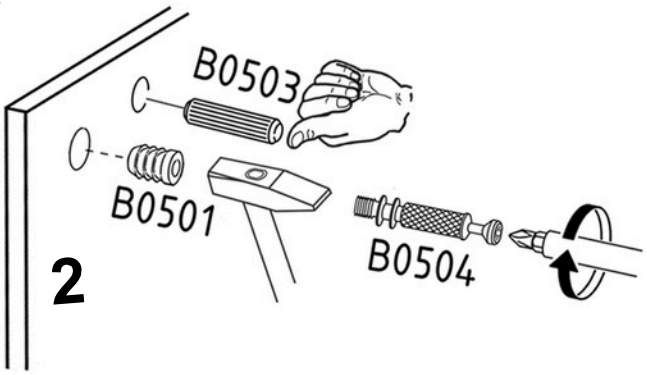
B0503
B0501
B0504
2

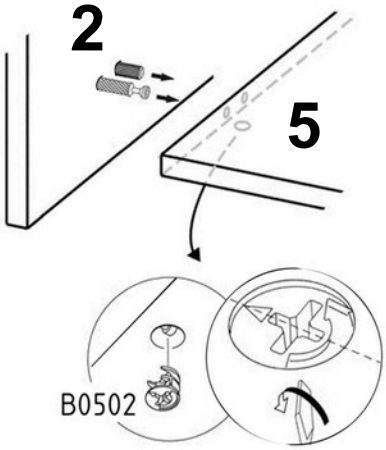
2
5
B0502

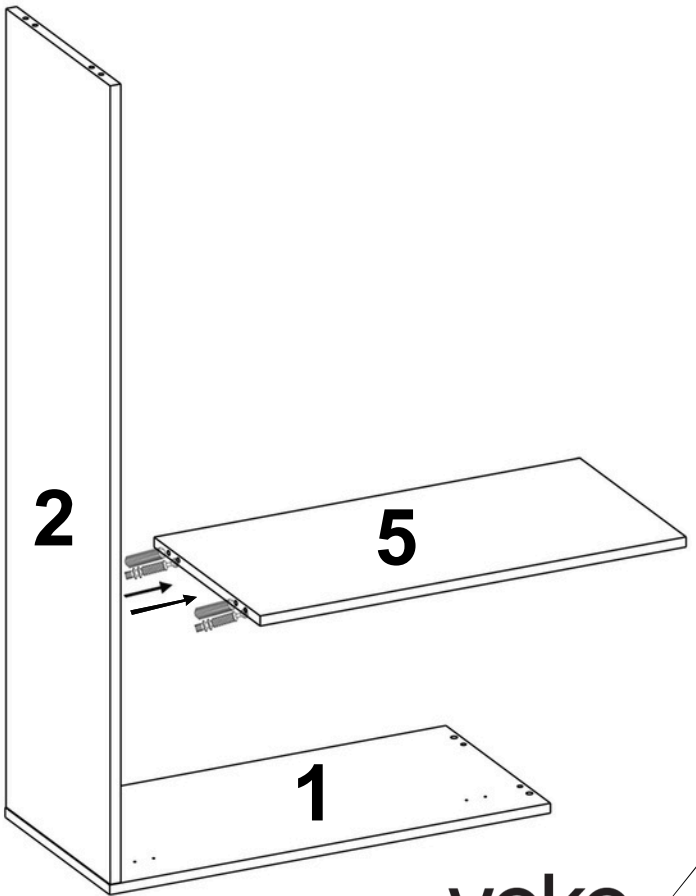
2
5
1

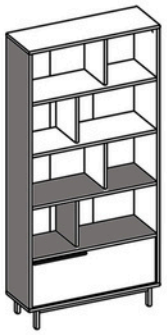

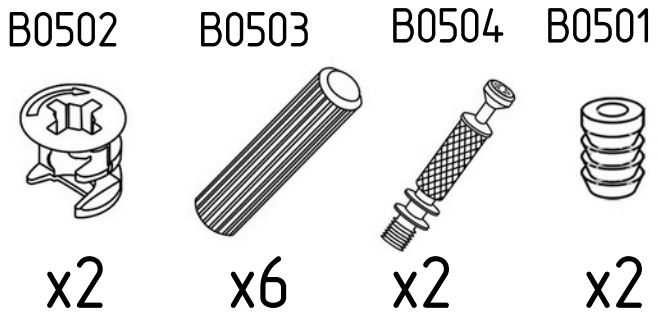
B0502
B0503
B0504
B0501
x2
x6
x2
x2

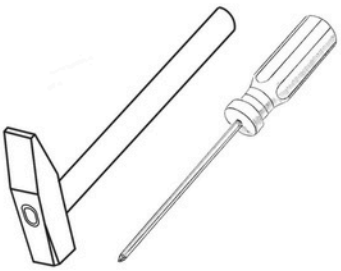

3

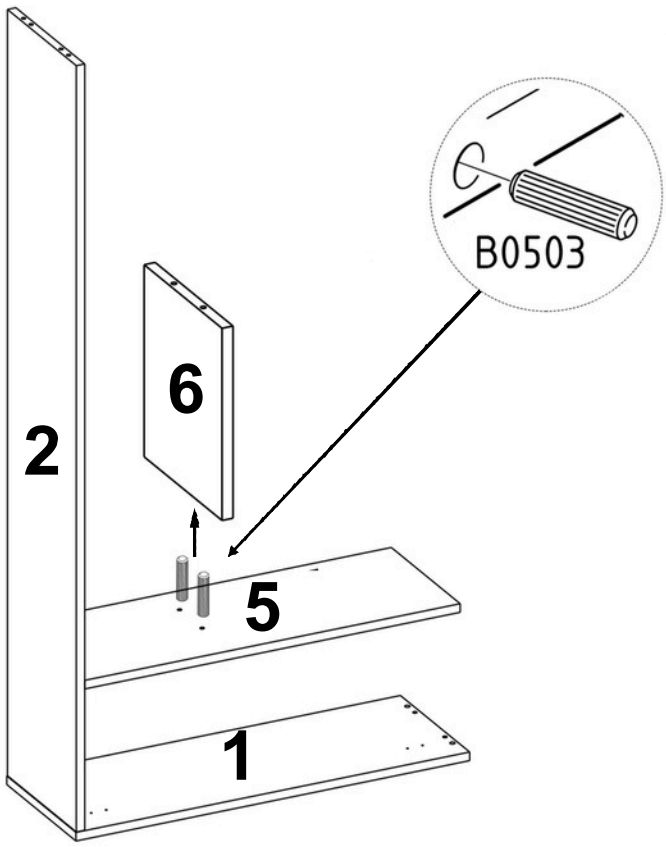
B0503
6
2
5
1

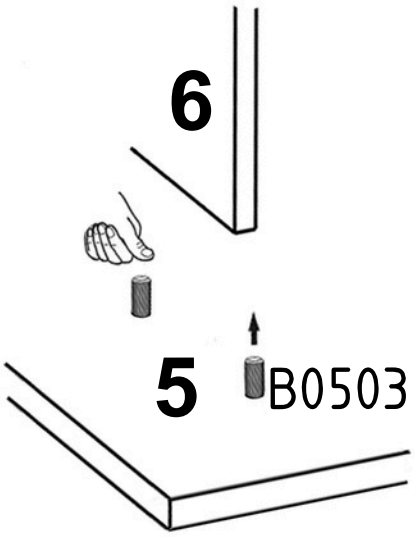
6
5
B0503

4

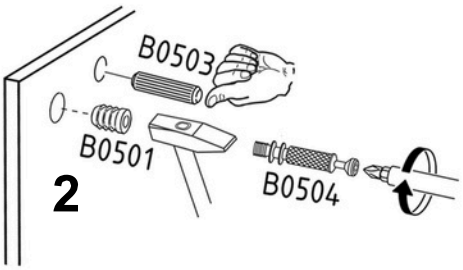
B0503
B0501
B0504
2

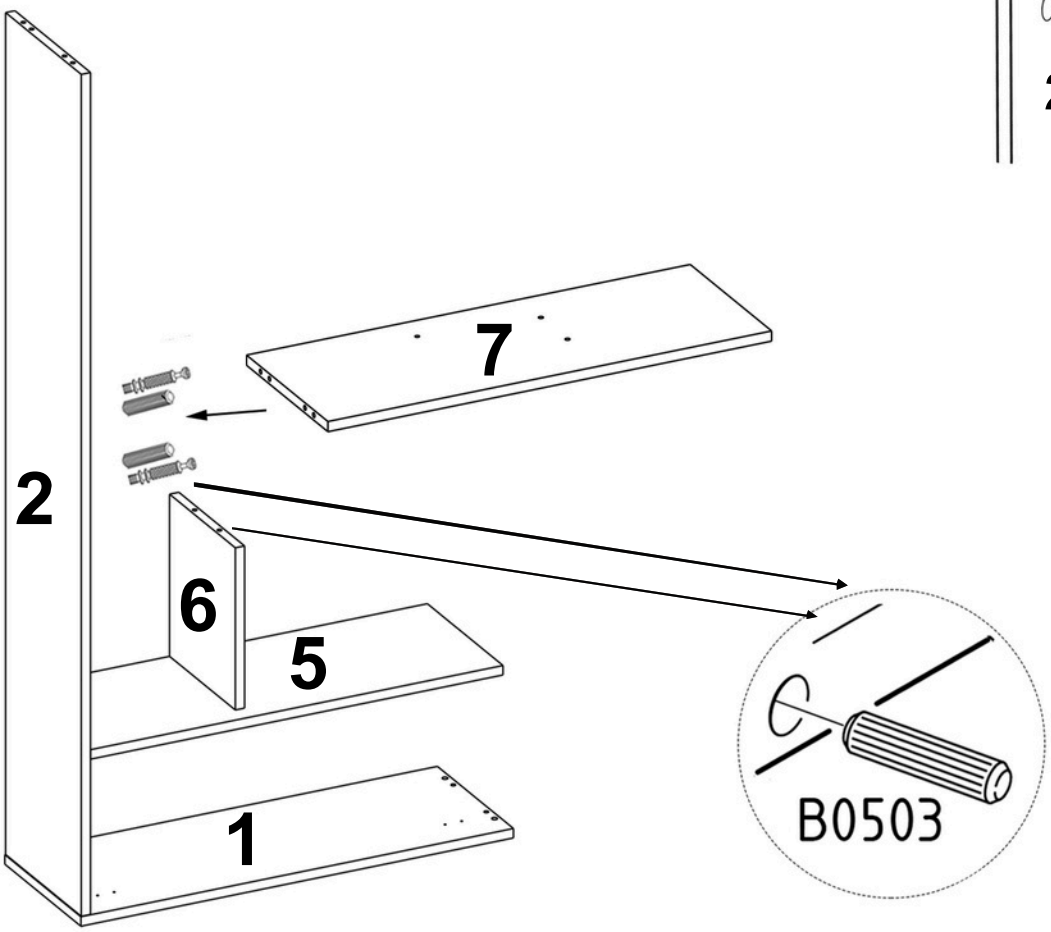
7
2
6
5
1
B0503

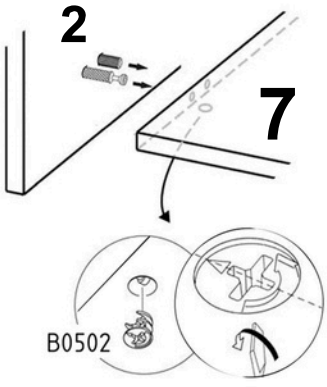
2
7
B0502

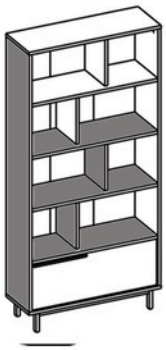

B0502 x2



B0503 x6



B0504 x2



B0501 x2

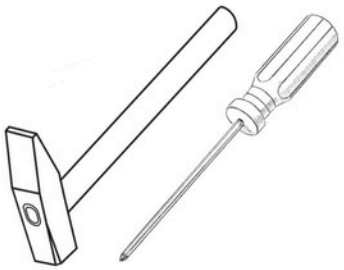

5

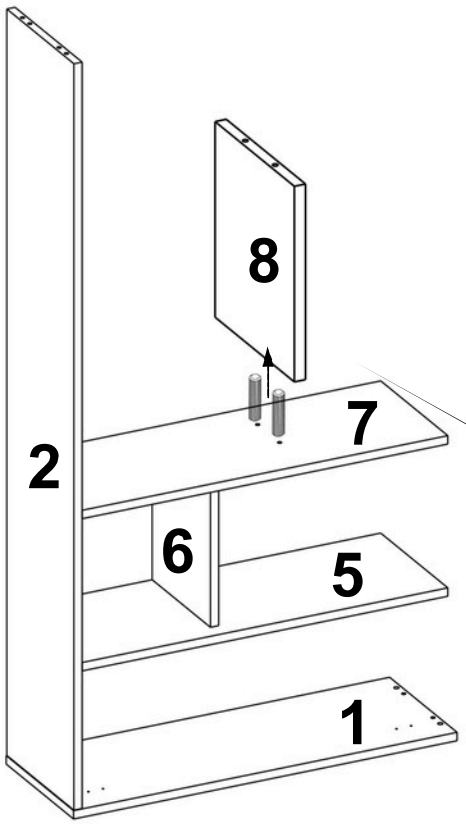

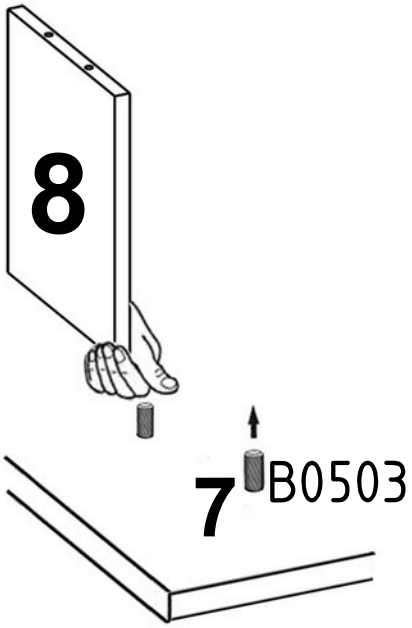



6

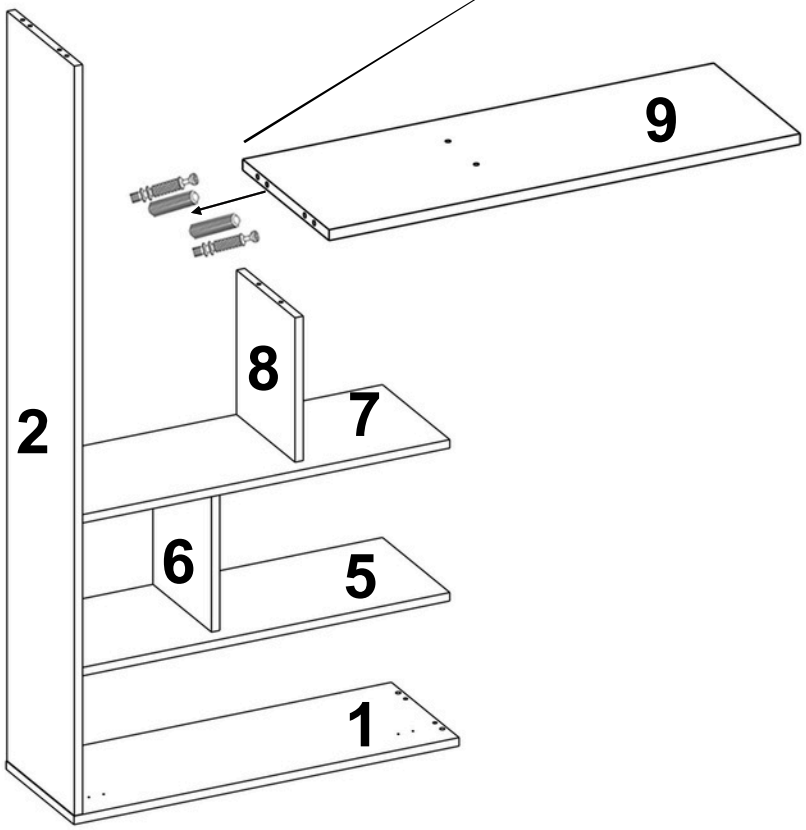

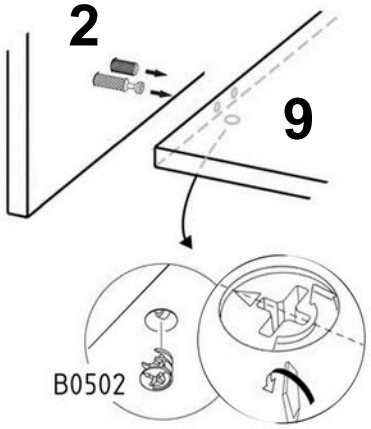

veke

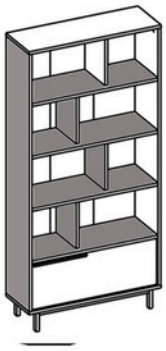


B0502

x2


B0503

x6


B0504

x2


B0501

x2

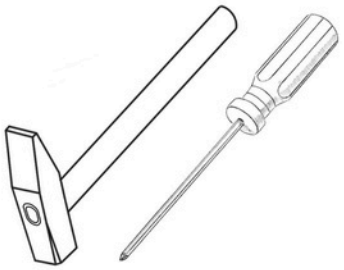

7

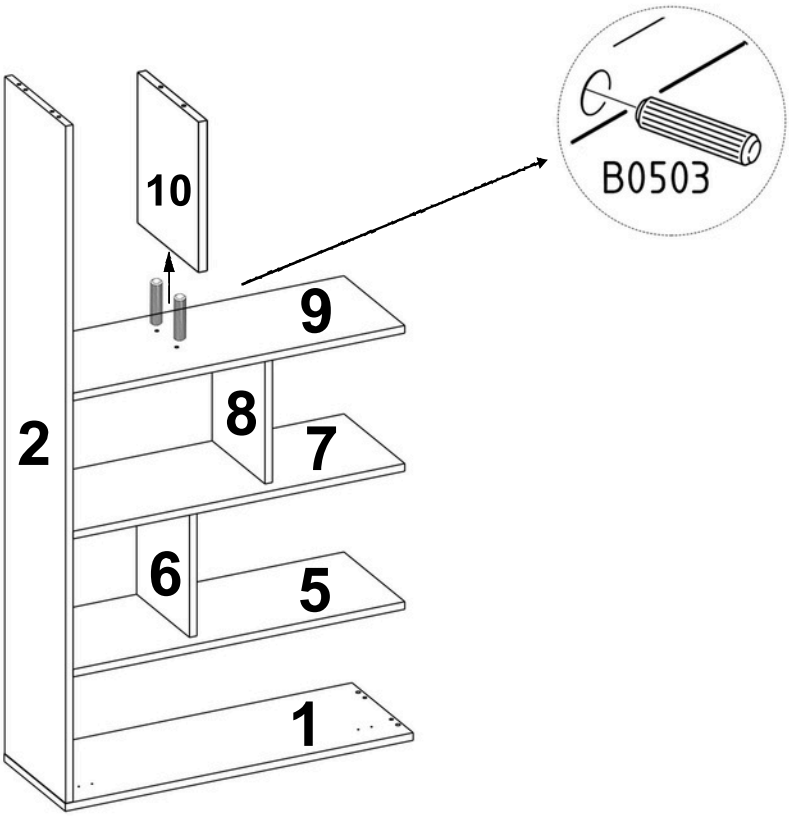

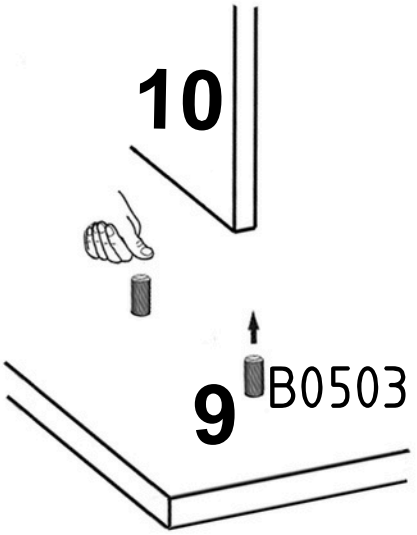

8

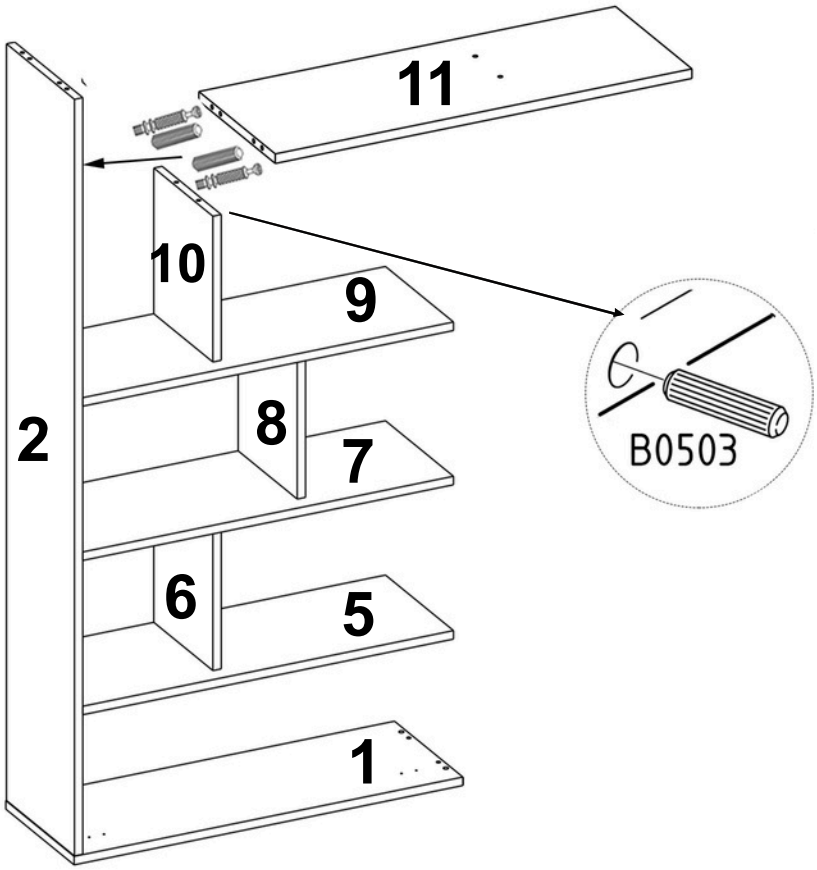

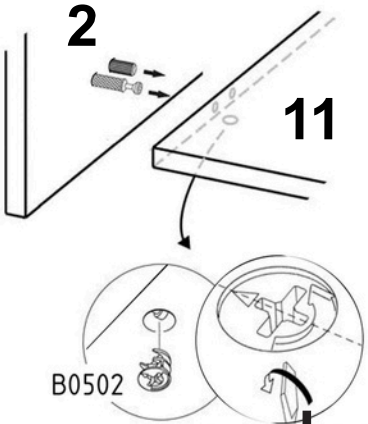

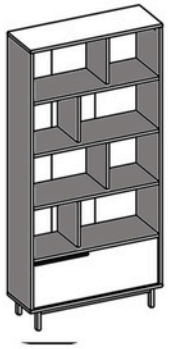

B0502 B0503 B0504 B0501






x10 x12 x10 x10

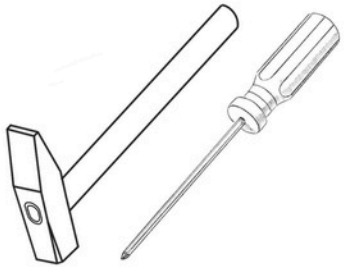

9

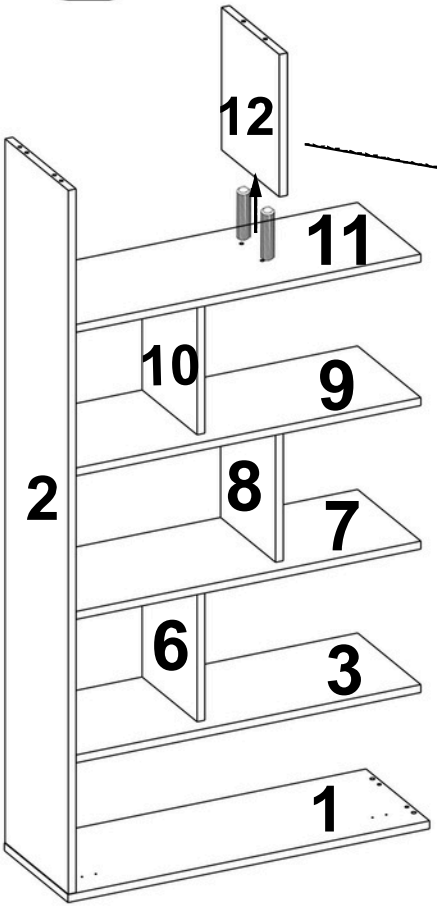



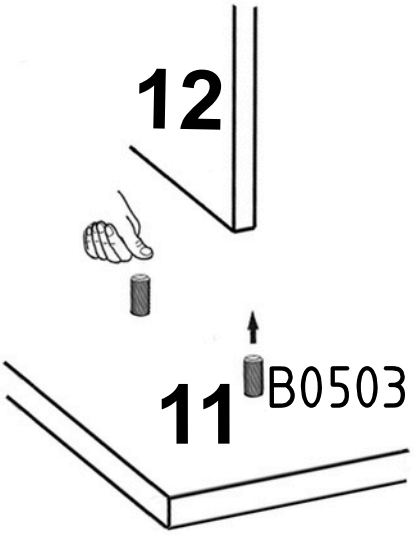

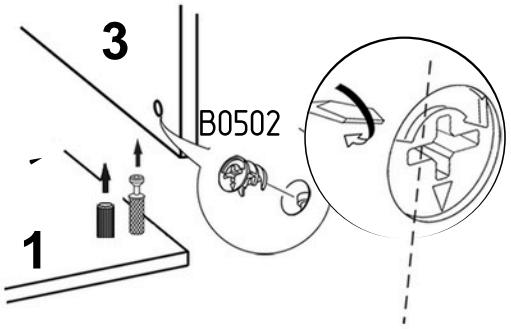

10

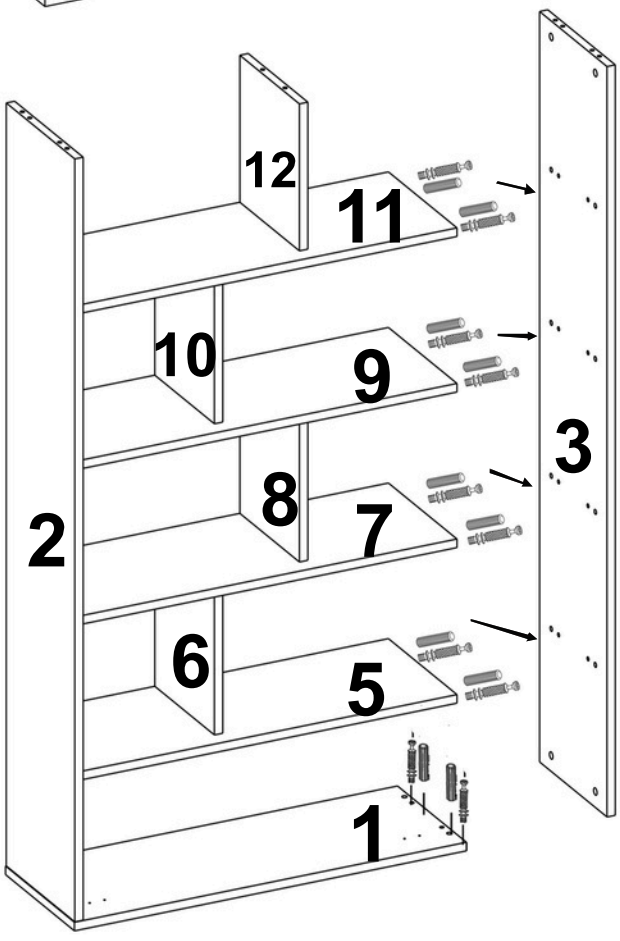

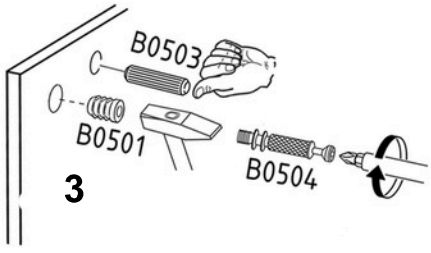



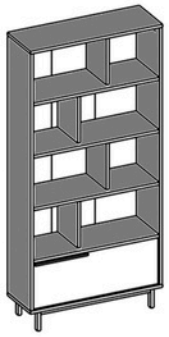

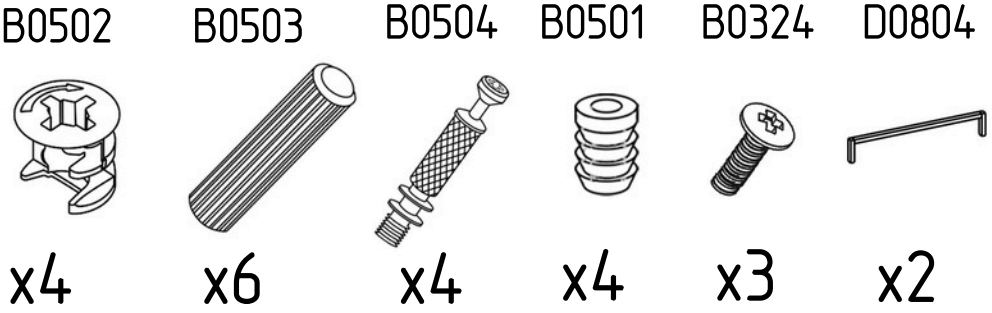
B0502
B0503
B0504
B0501
B0324
D0804
x4
x6
x4
x4
x3
x2

11

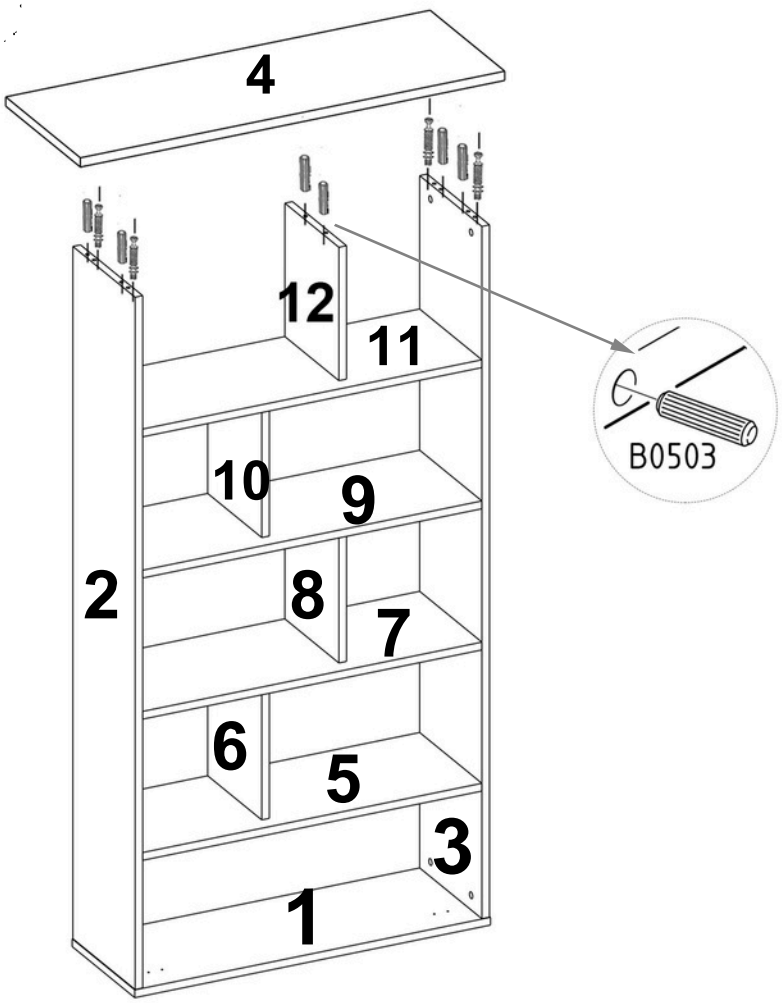
4
12
11
10
9
2
8
7
6
5
3
1
B0503

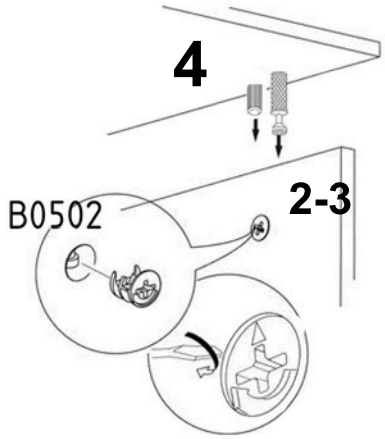
4
B0502
2-3

12

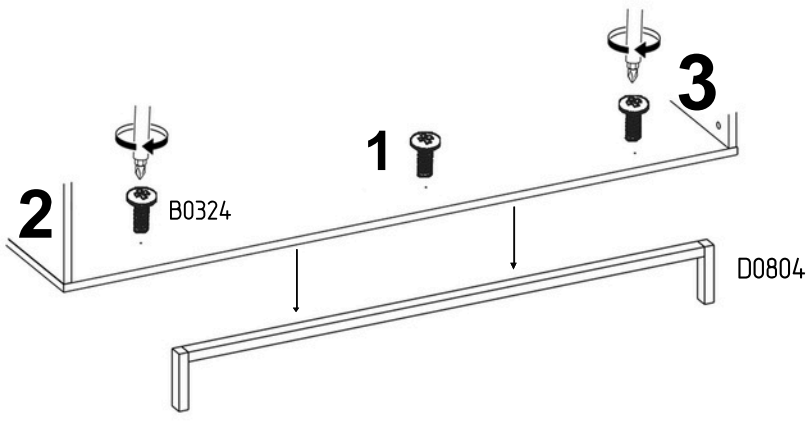
3
1
2
B0324
D0804

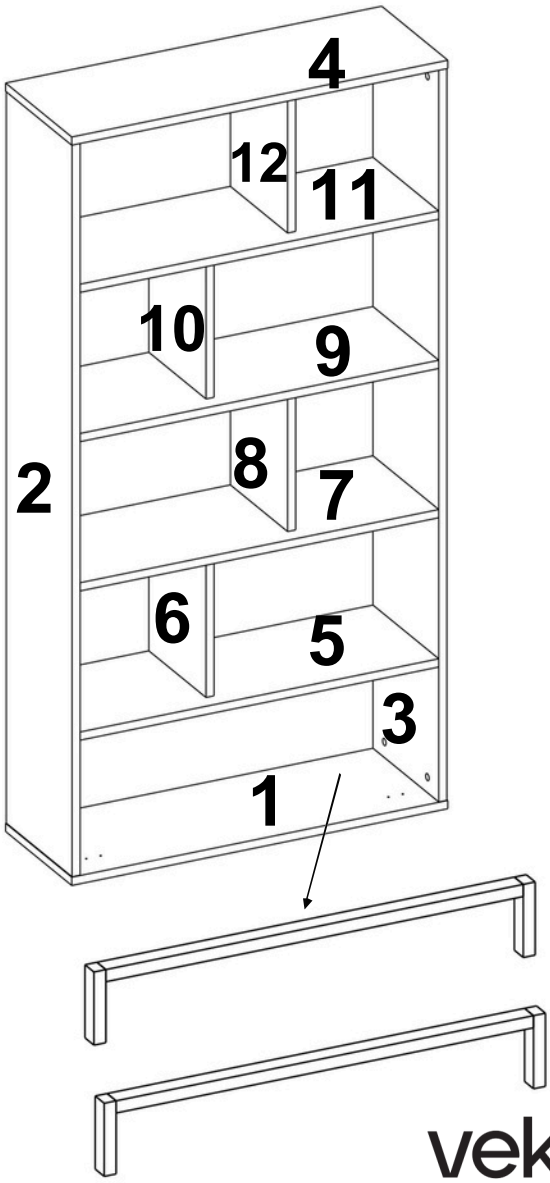
4
12
11
10
9
2
8
7
6
5
3
1

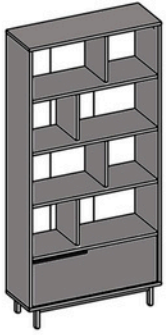


B0301

x8


B0103

x2

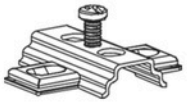
B0105

x2


B0509

x1



13

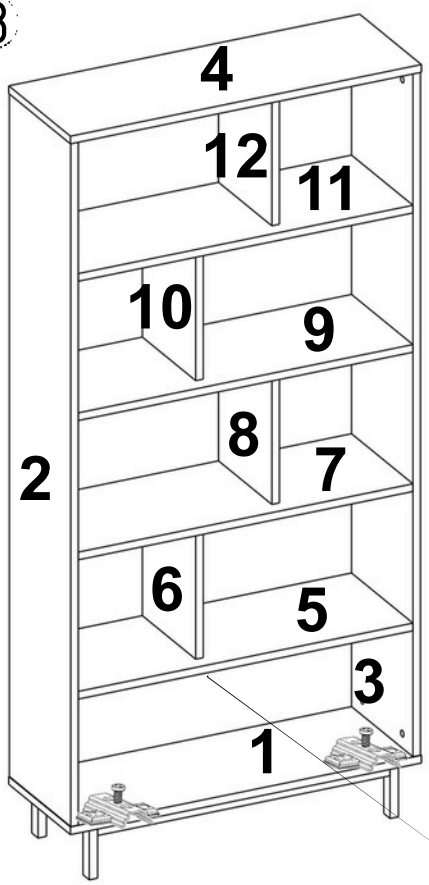

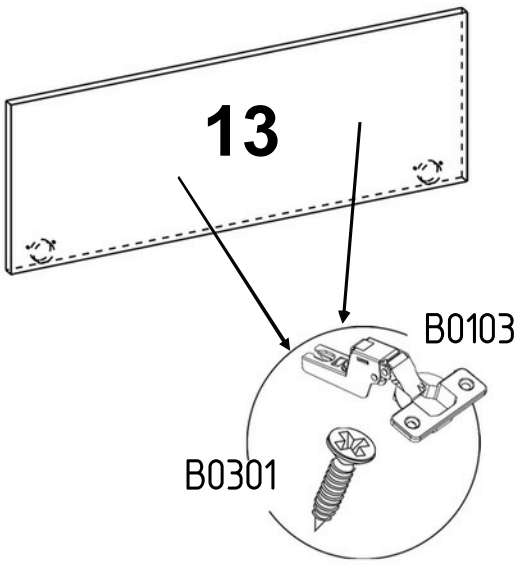

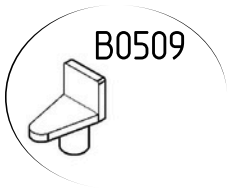

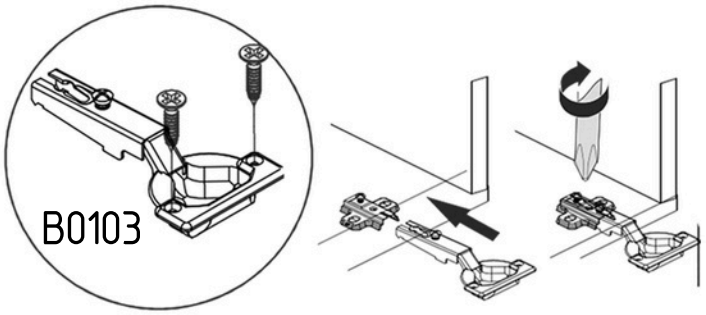

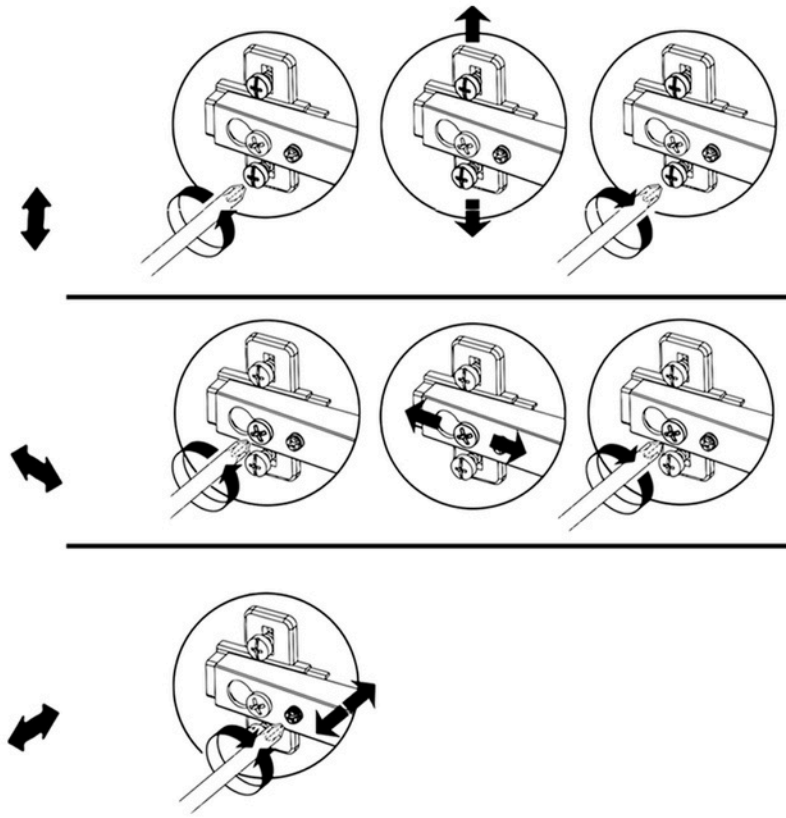

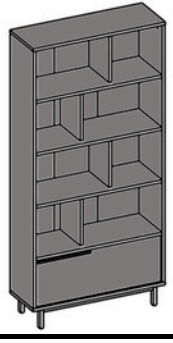


B0307

x2


B0318

x38


B0203

x1

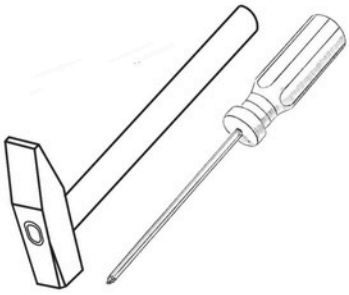

14

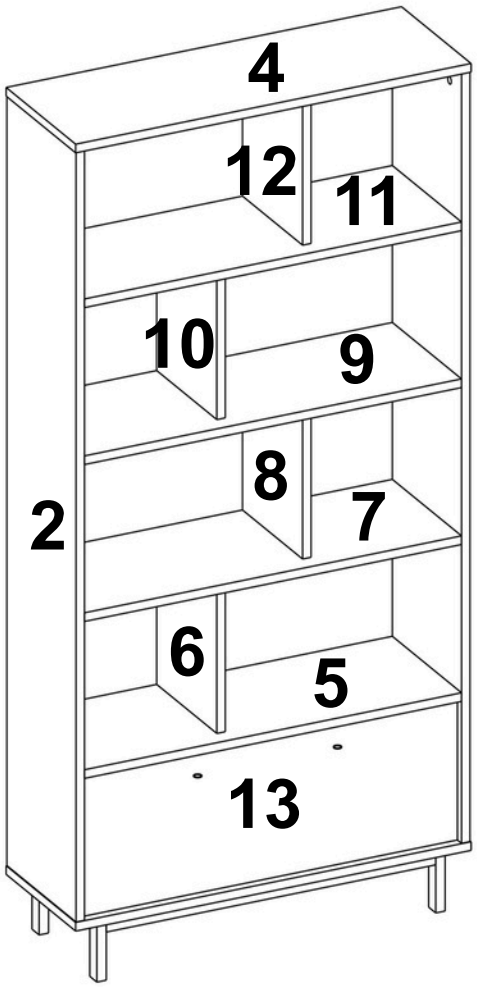

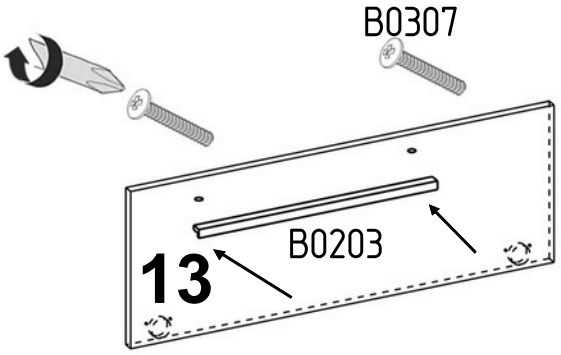

15

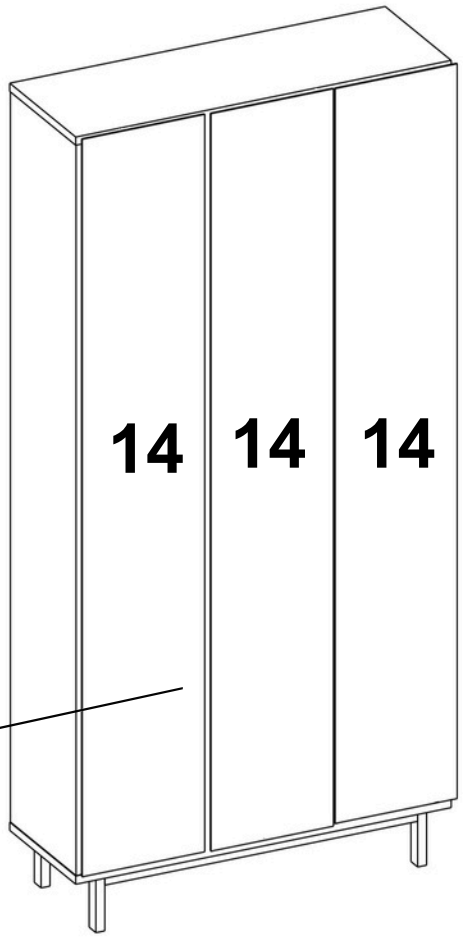

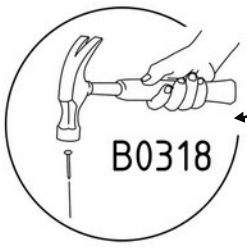

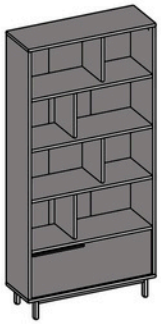

B1702



x4

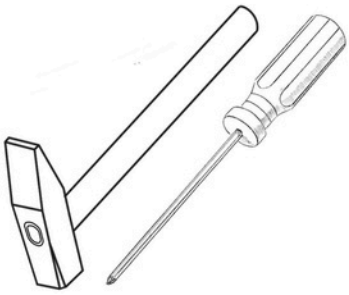

16

