Kuusio seinähylly
Kokoamisohje

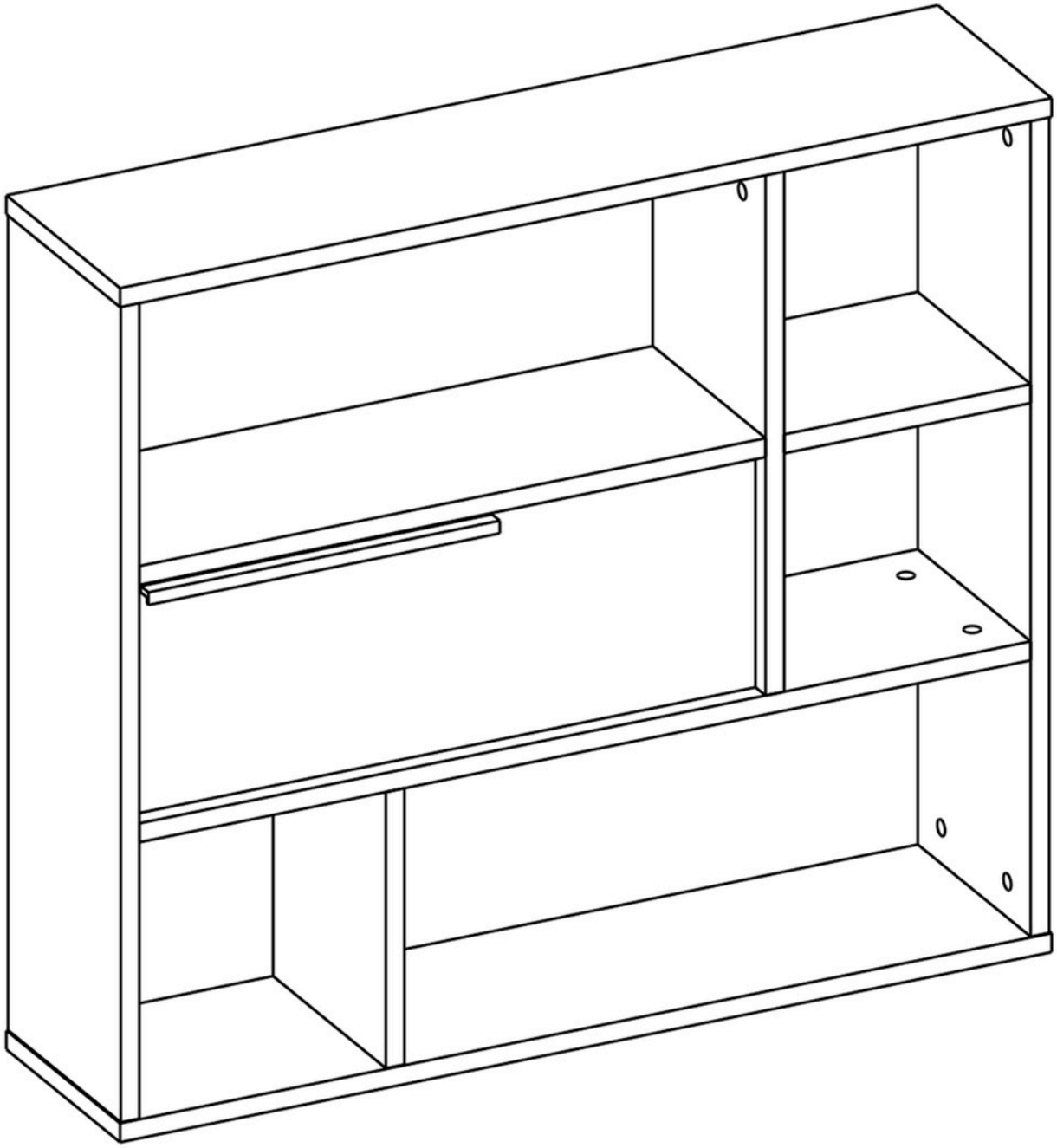

veke

 B0501 x20	 B0502 x20	 B0503 x28	 B0504 x20	 B0301 x16
 B0306 x4	 B0317 x4	 B0103 x2	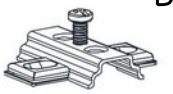 B0105 x2	 B0307 x2
 B0203 x1	 B0318 x15	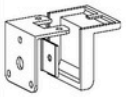 B1303 x4	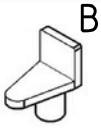 B0509 x1	

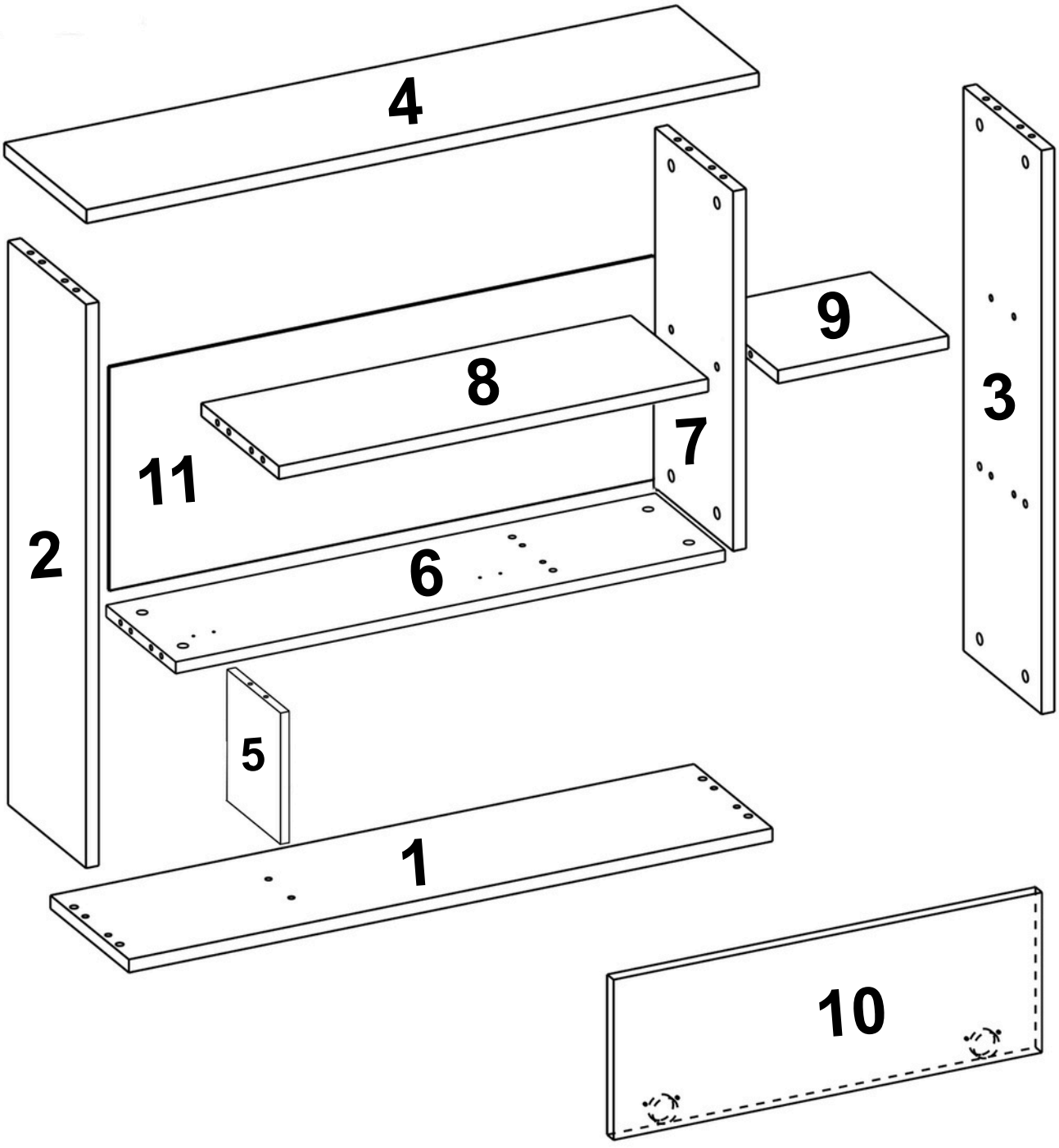

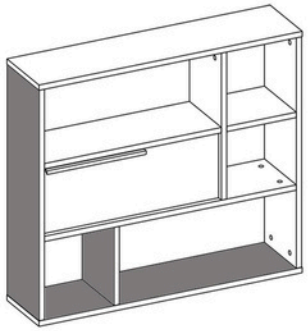

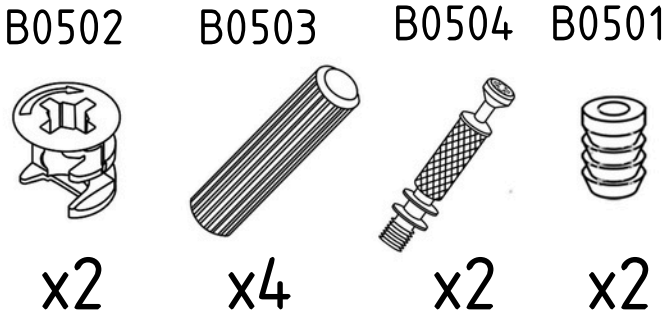
B0502
B0503
B0504
B0501
x2
x4
x2
x2

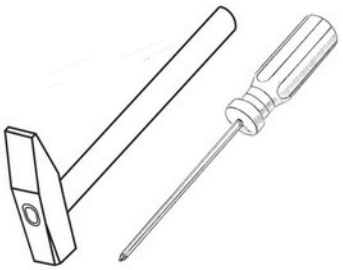

1

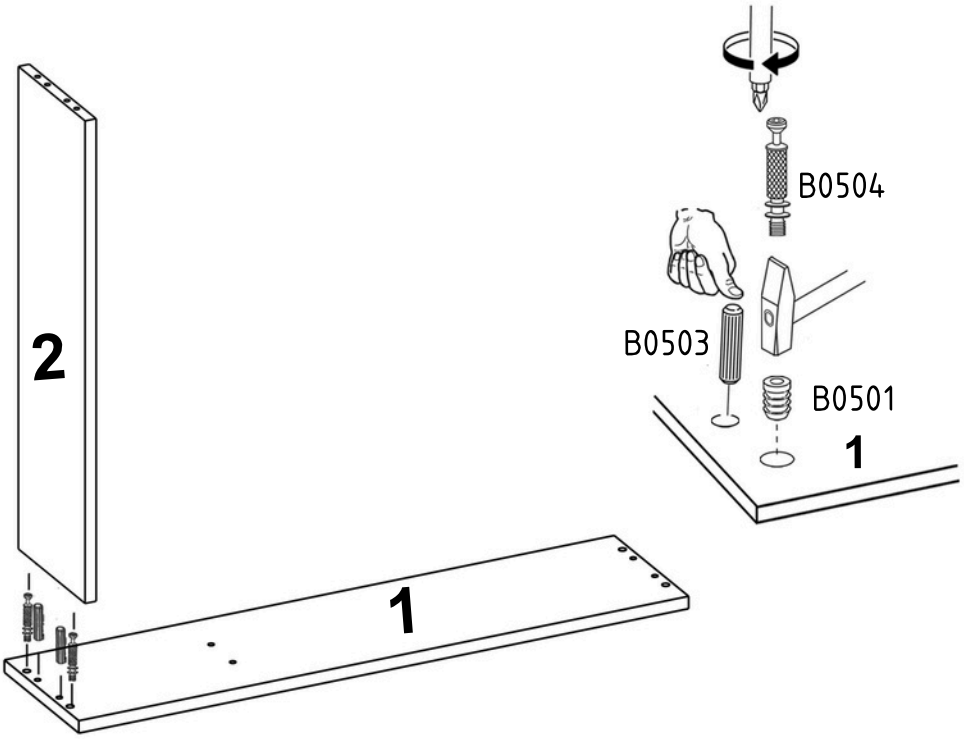
2
1
B0504
B0503
B0501
1

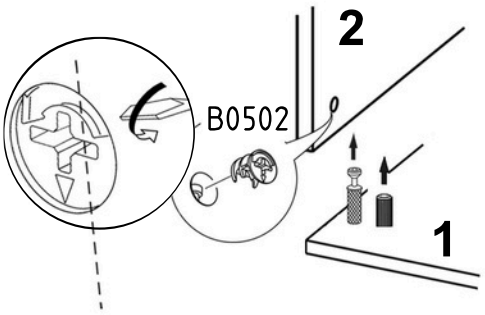
2
B0502
1

2

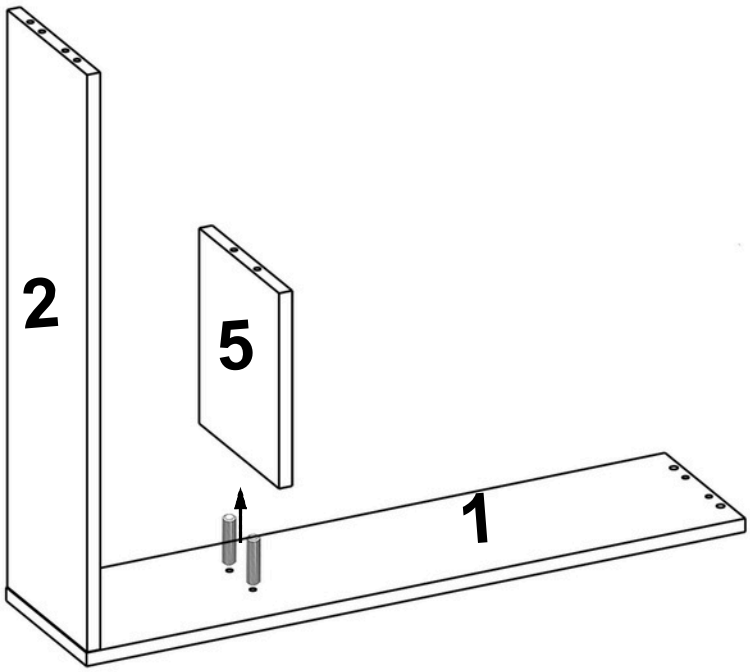
2
5
1

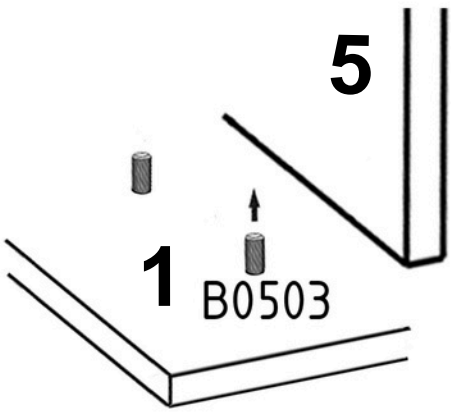
5
1
B0503

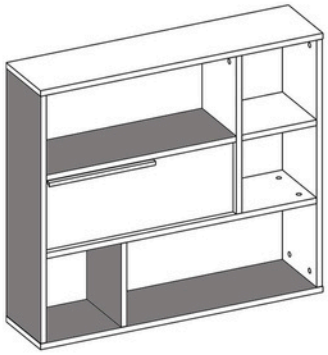

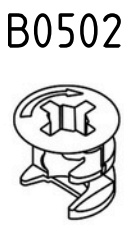
B0502
x4


B0503
x6


B0504
x4


B0501
x4

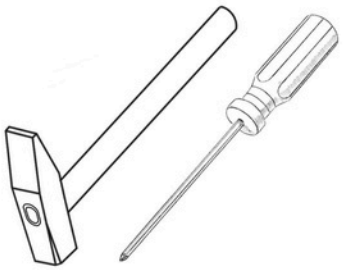

3

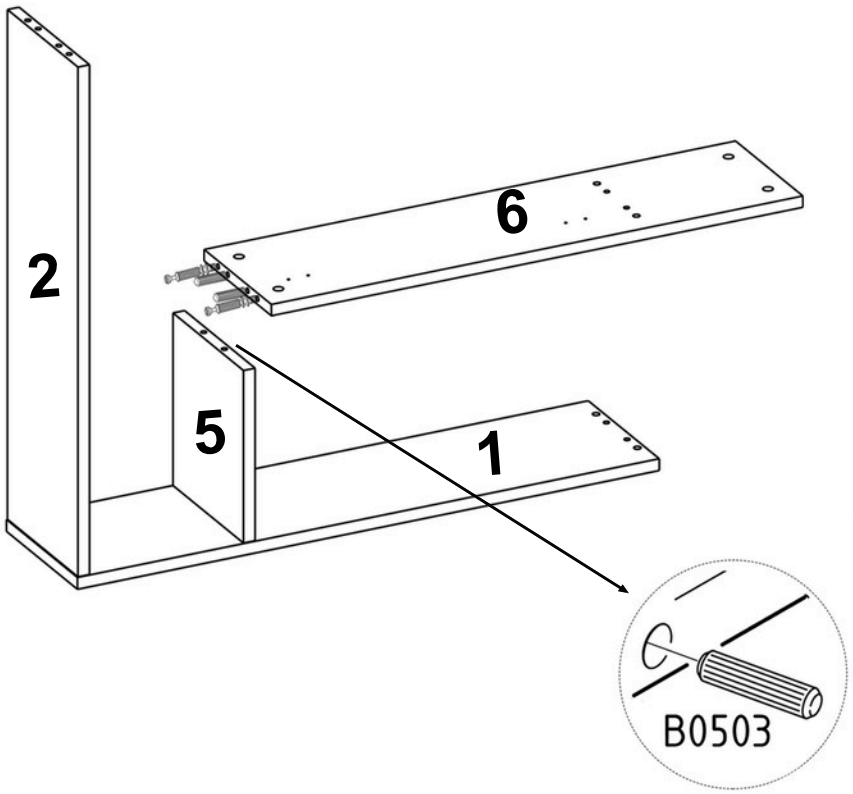
2
6
5
1
B0503

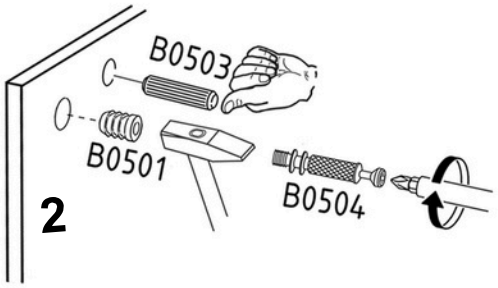
B0503
B0501
B0504
2

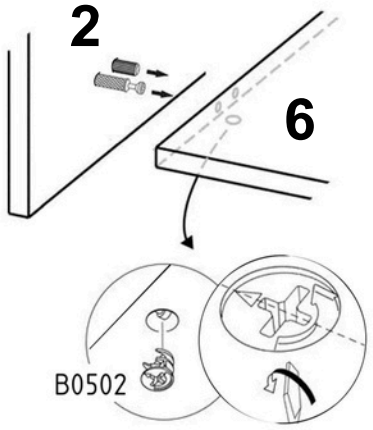
2
6
B0502

4

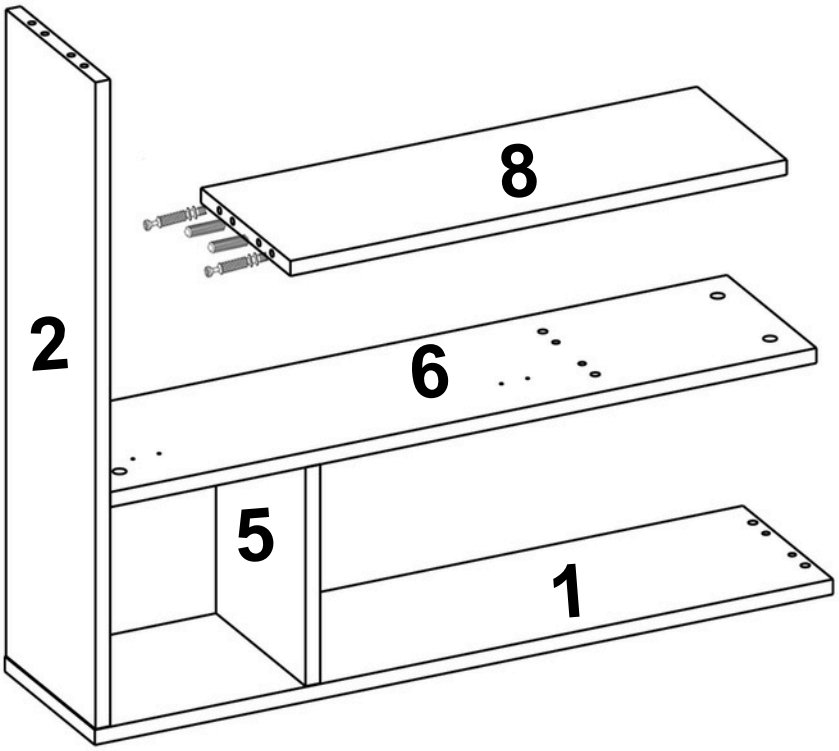
8
2
6
5
1

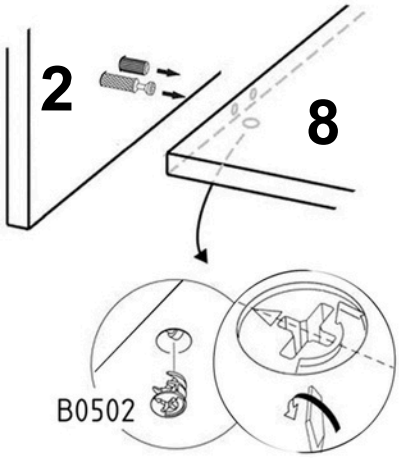
2
8
B0502

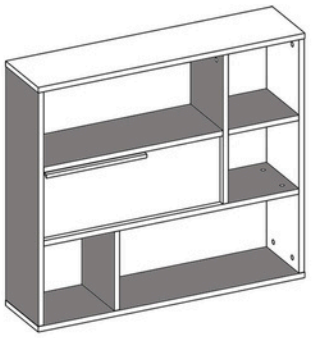

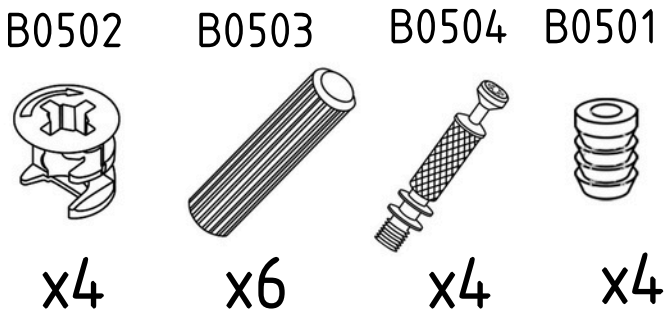
B0502
B0503
B0504
B0501
x4
x6
x4
x4

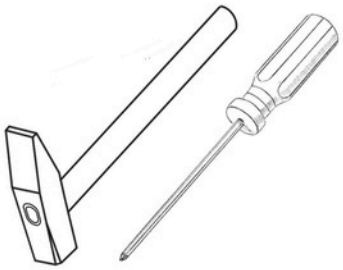

5

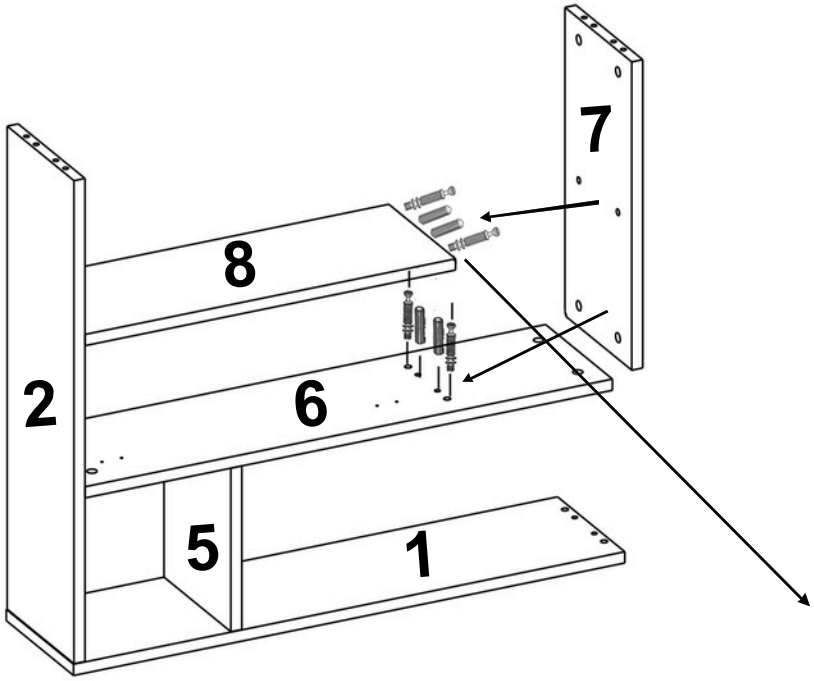
7
8
2
6
5
1

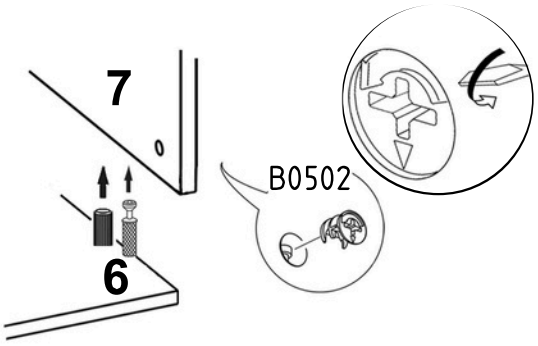
7
B0502
6

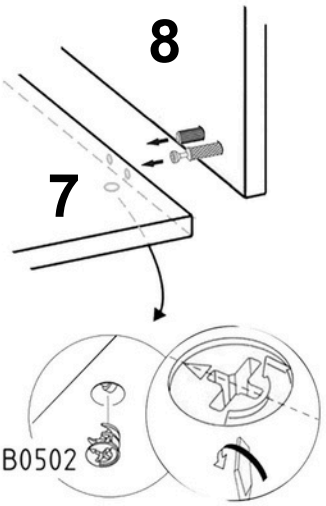
8
7
B0502

6

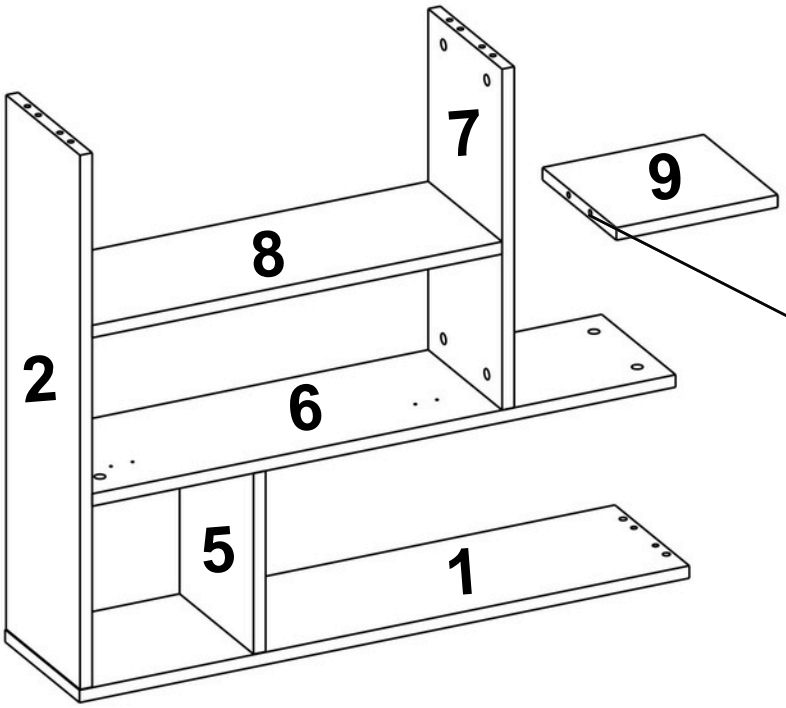
7
9
8
2
6
5
1


B0503

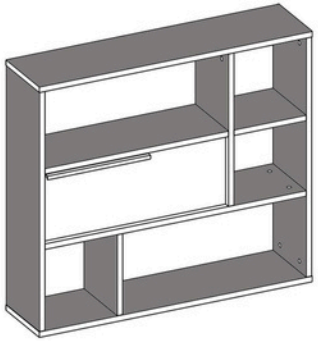

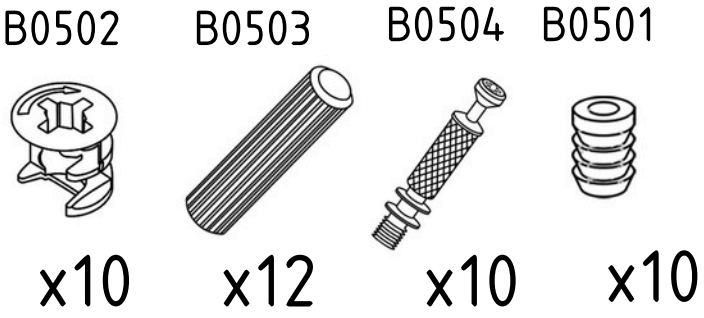
B0502
B0503
B0504
B0501
x10
x12
x10
x10

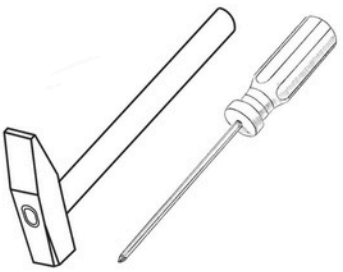

7

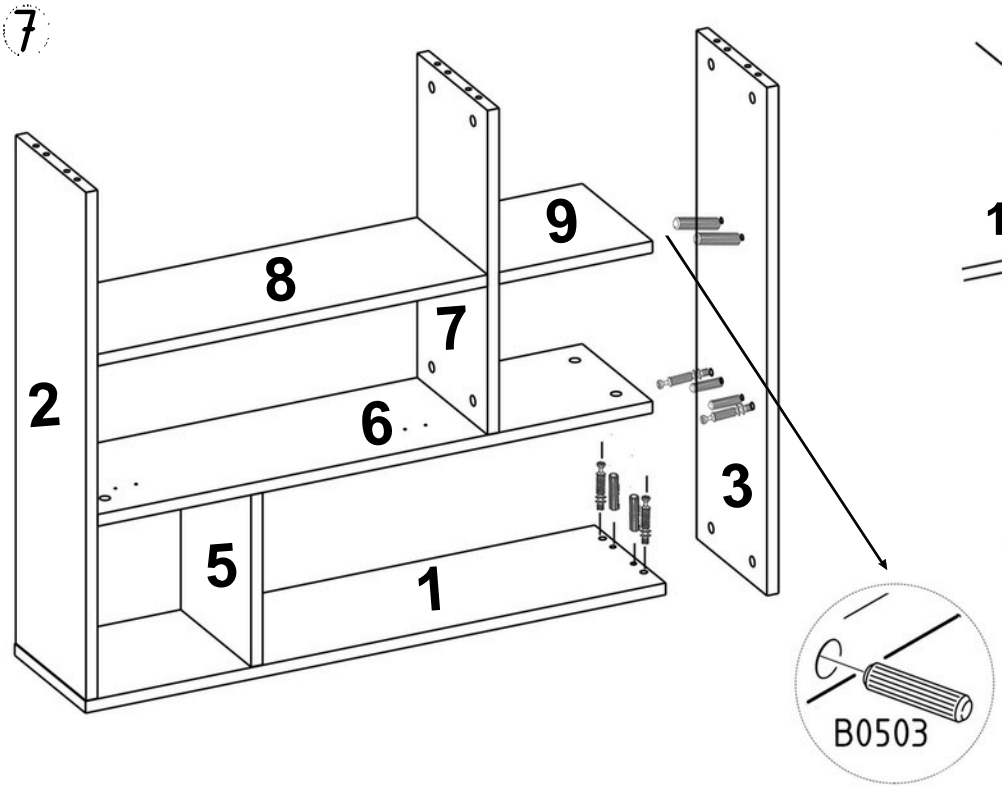
9
8
7
2
6
3
5
1

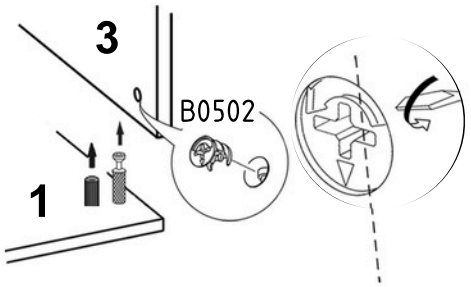
3
B0502
1

B0503

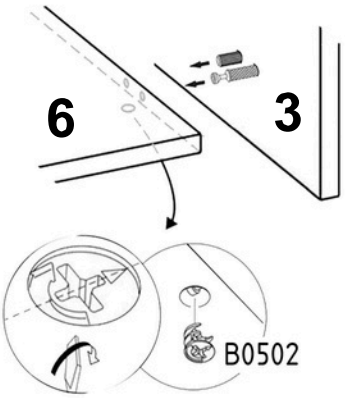
6
3
B0502

8

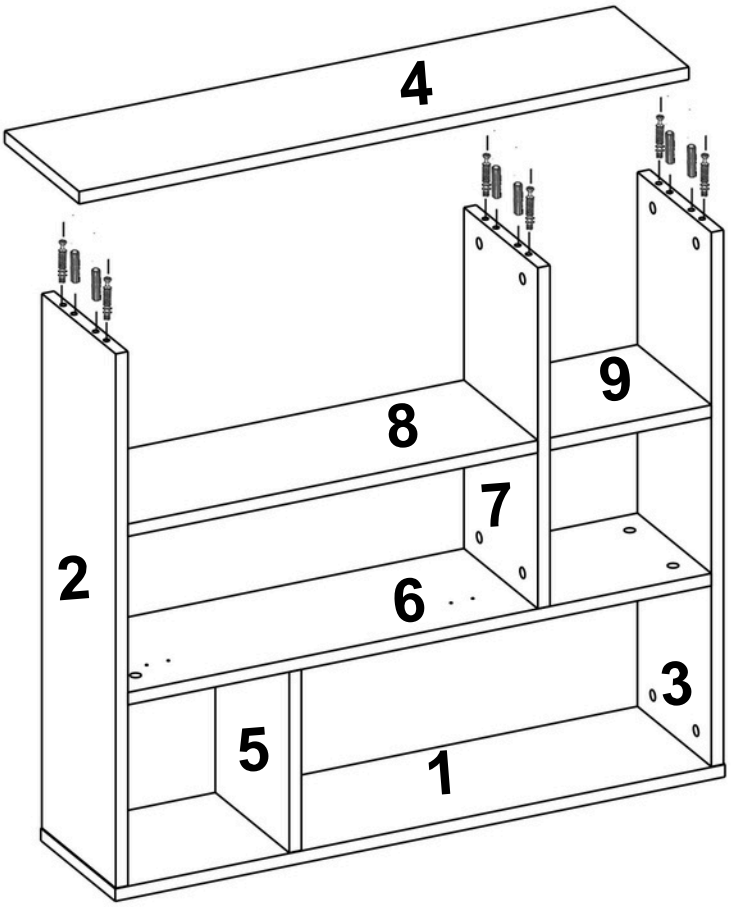
4
9
8
7
2
6
3
5
1

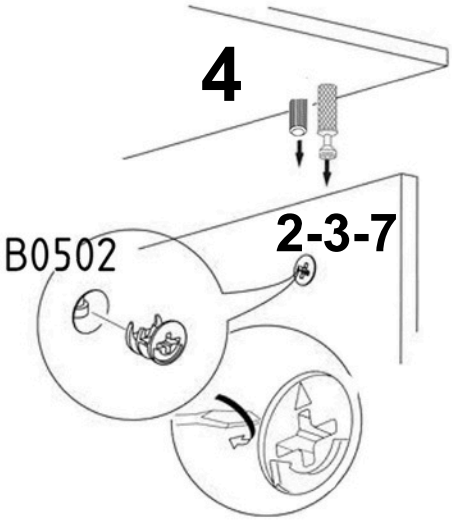
4
B0502
2-3-7

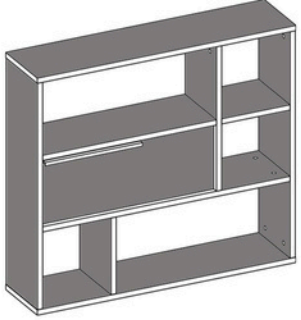


B0301

x8

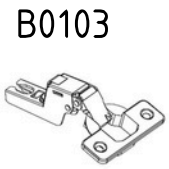
B0103

x2

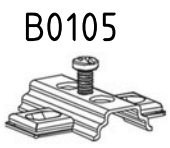
B0105

x2

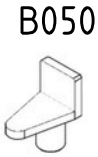
B0509

x1



9

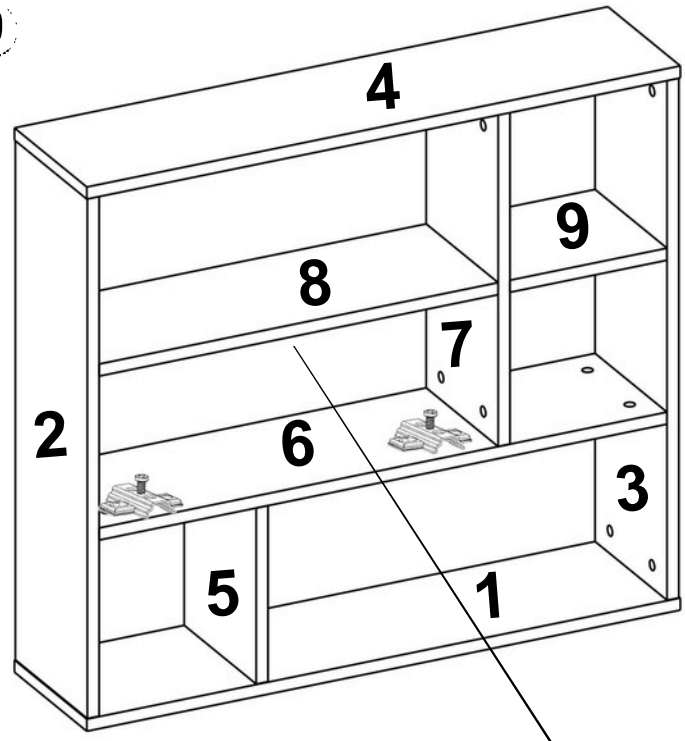
4
9
8
7
2
6
3
5
1

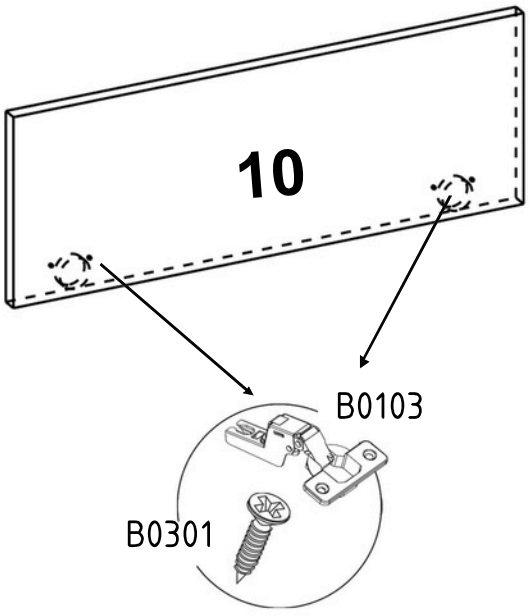
10
B0103
B0301

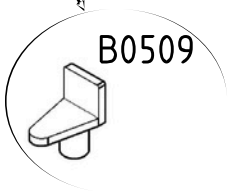
B0509

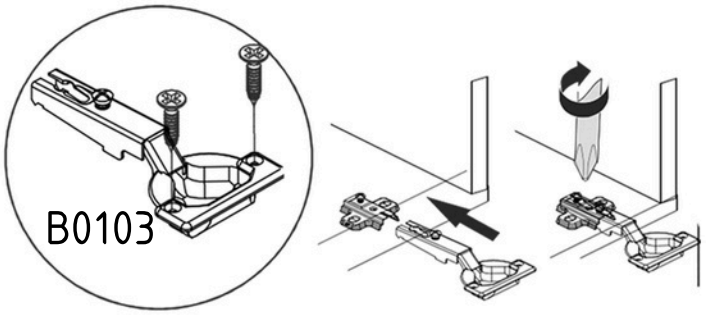
B0103

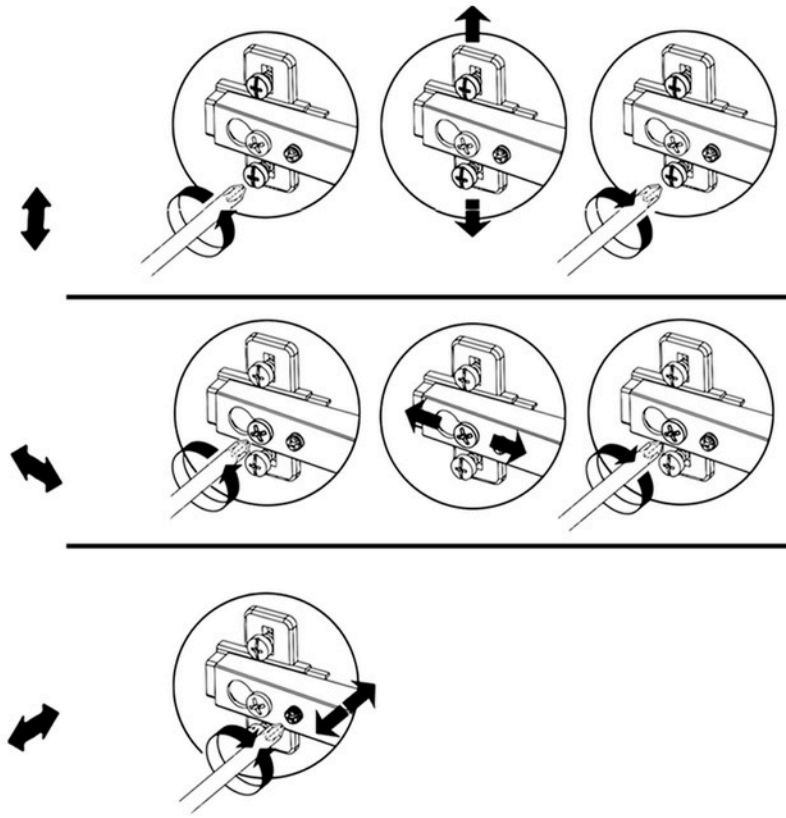

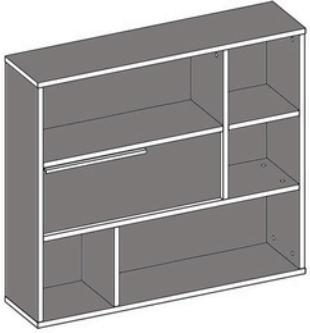

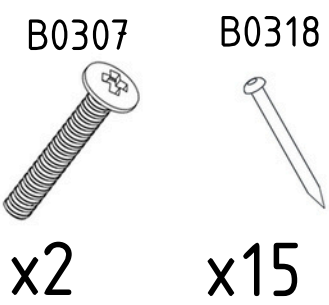
B0307
B0318
B0203
x2
x15
x1

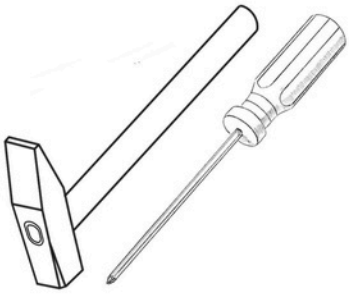

10

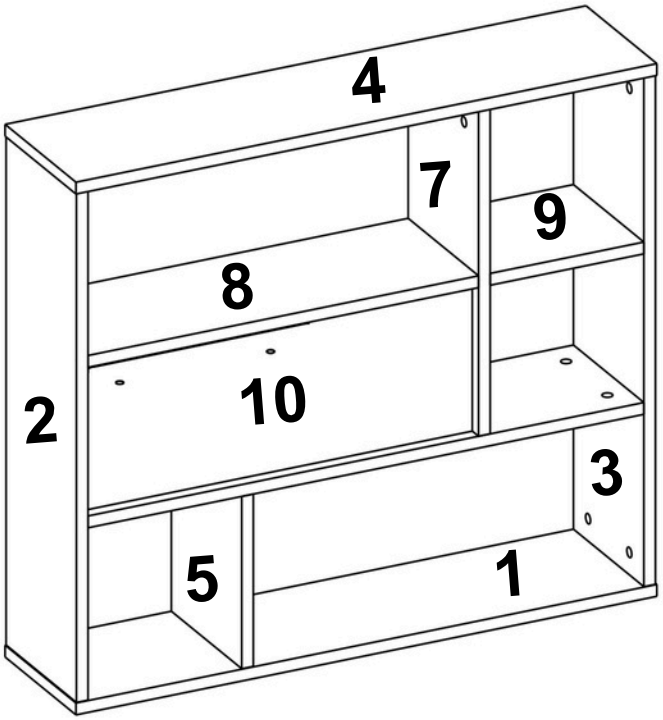
4
7
9
8
2
10
3
5
1

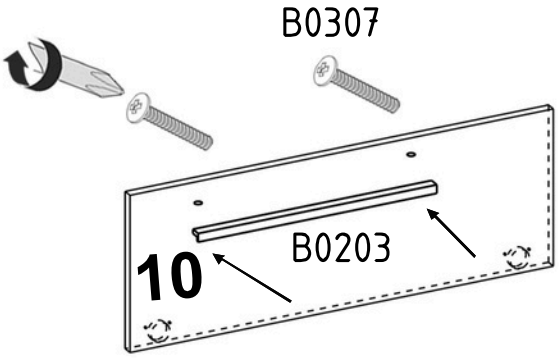
B0307
B0203
10

11

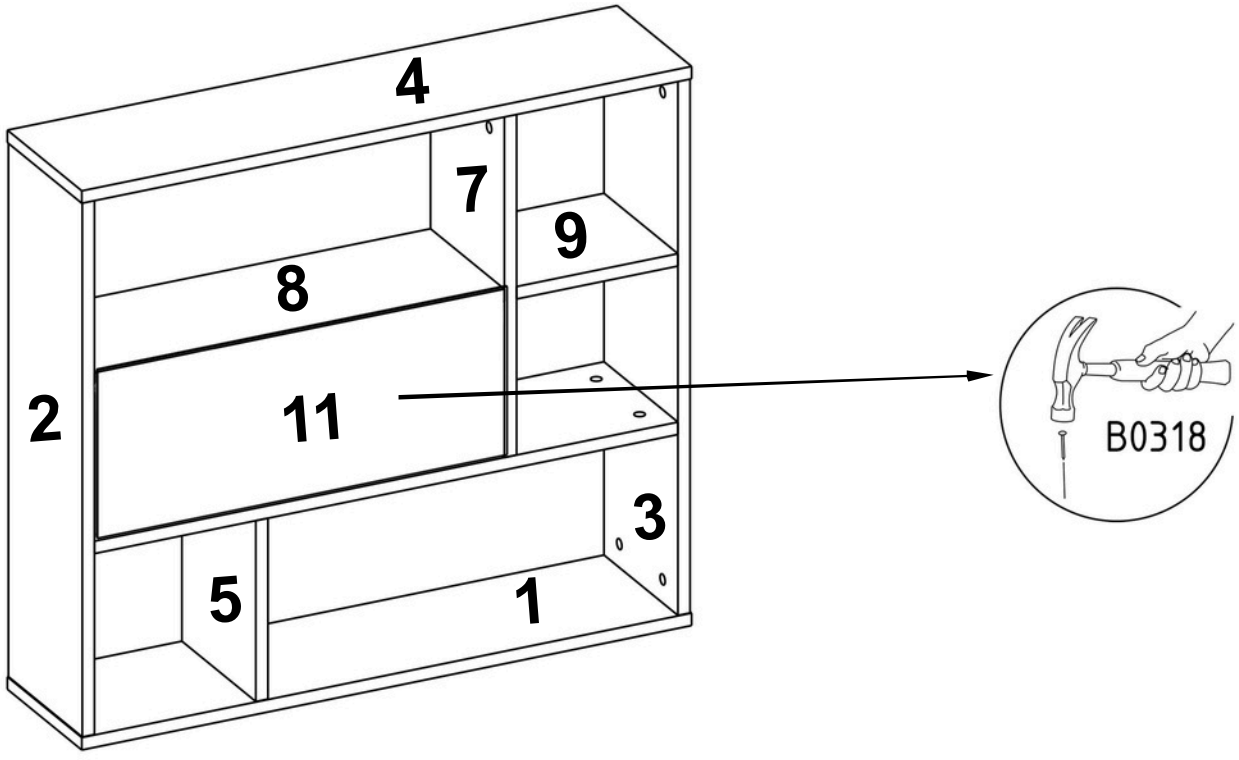
4
7
9
8
2
11
3
5
1
B0318

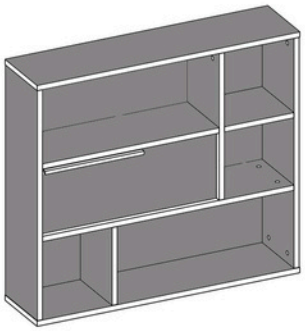


B0306

x4


B0317

x4

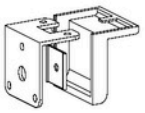
B1303

x4


B0301

x8



12

