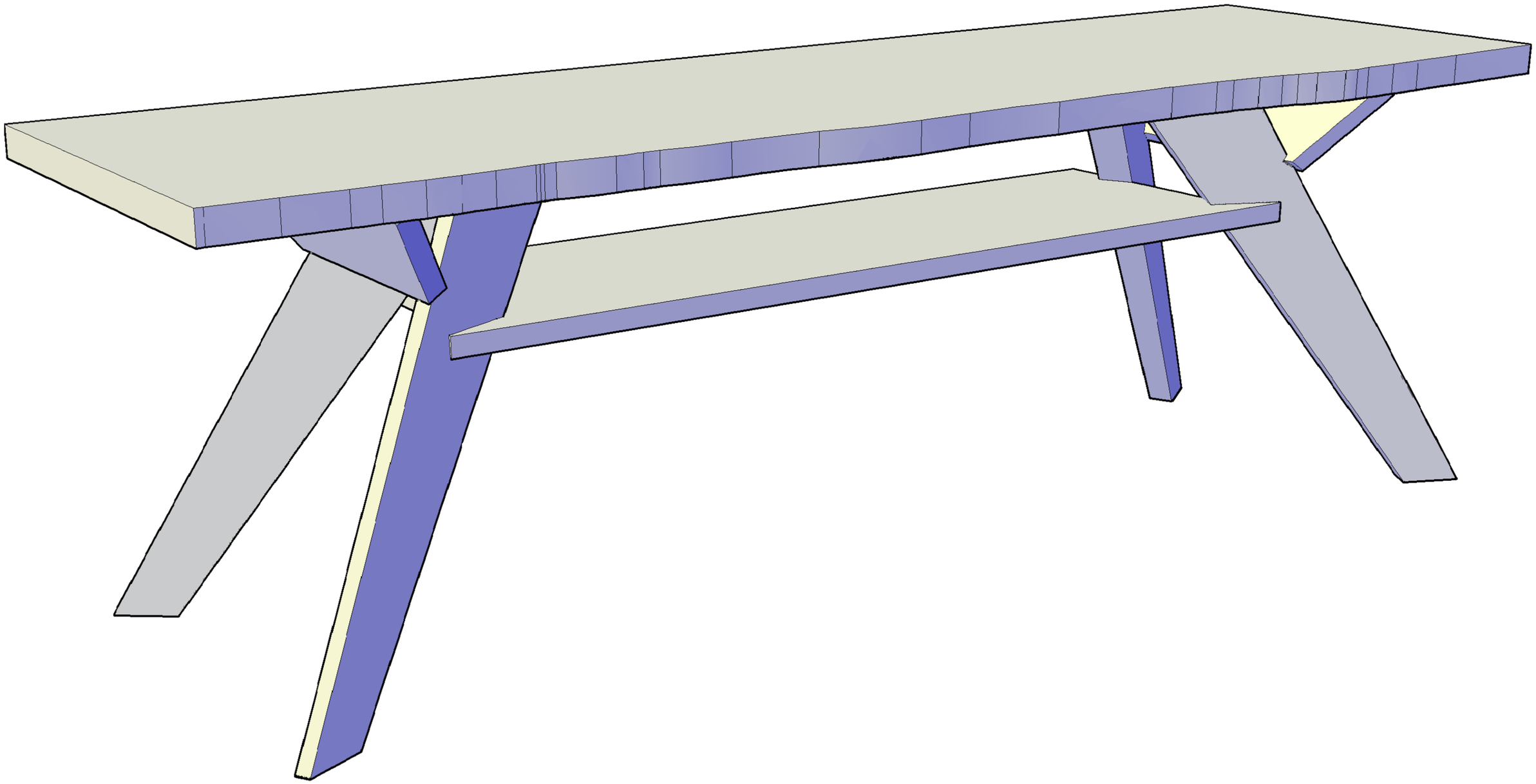

A ø10 x12 B ø8 x8 C 40 mm x4 D 50 mm x4

x1 GLUE x1

1.

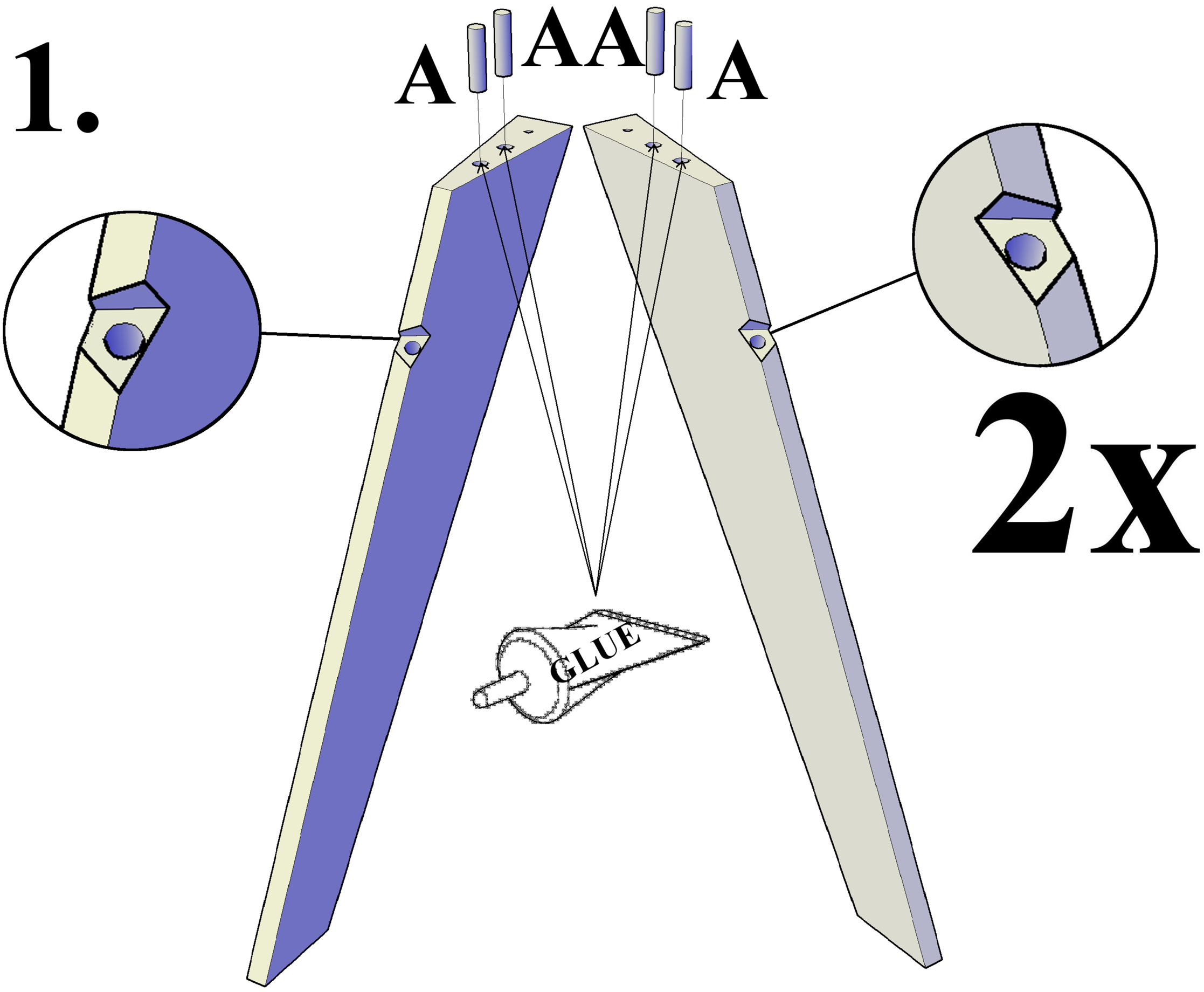

2.

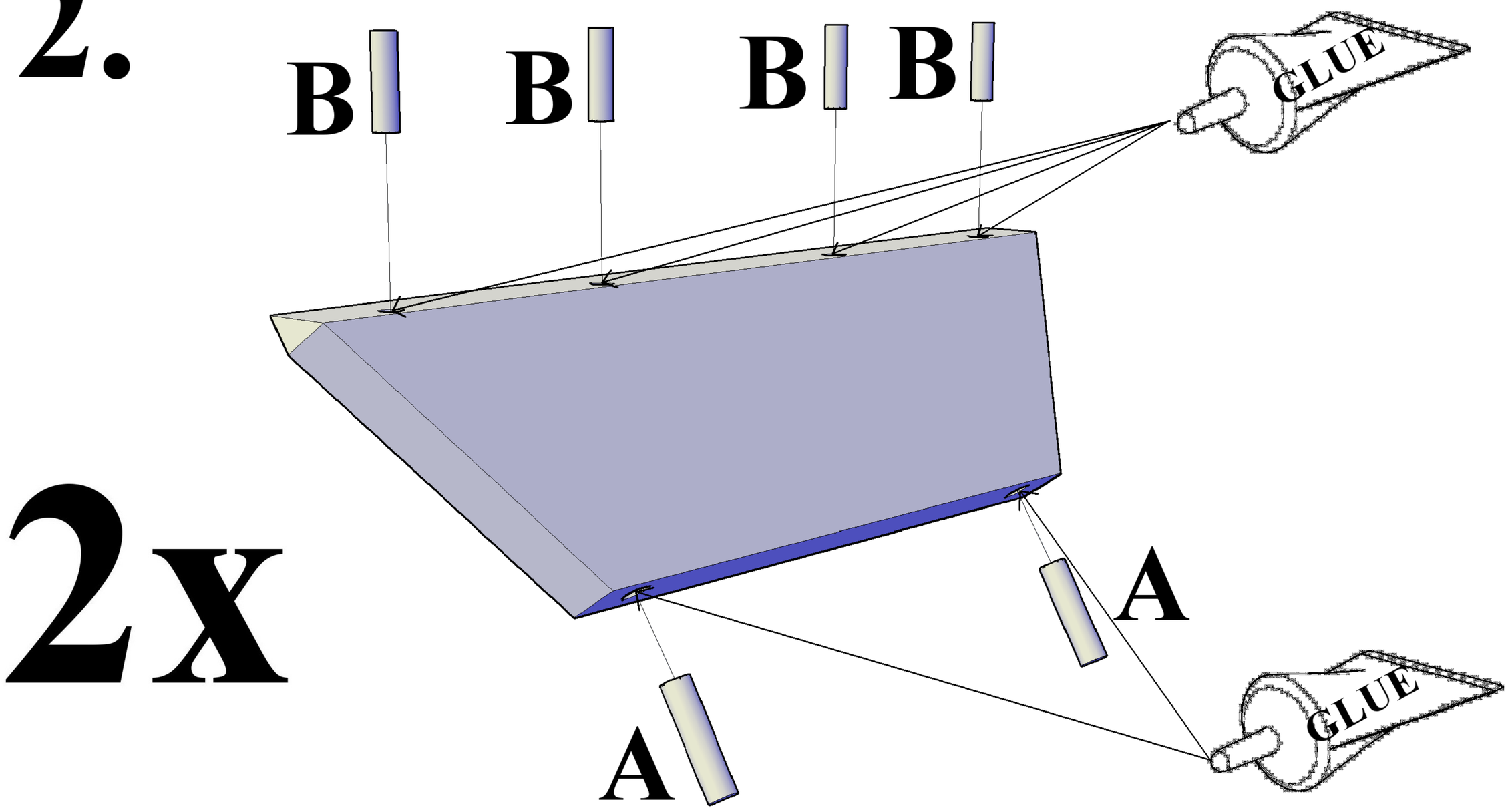

3.

2x

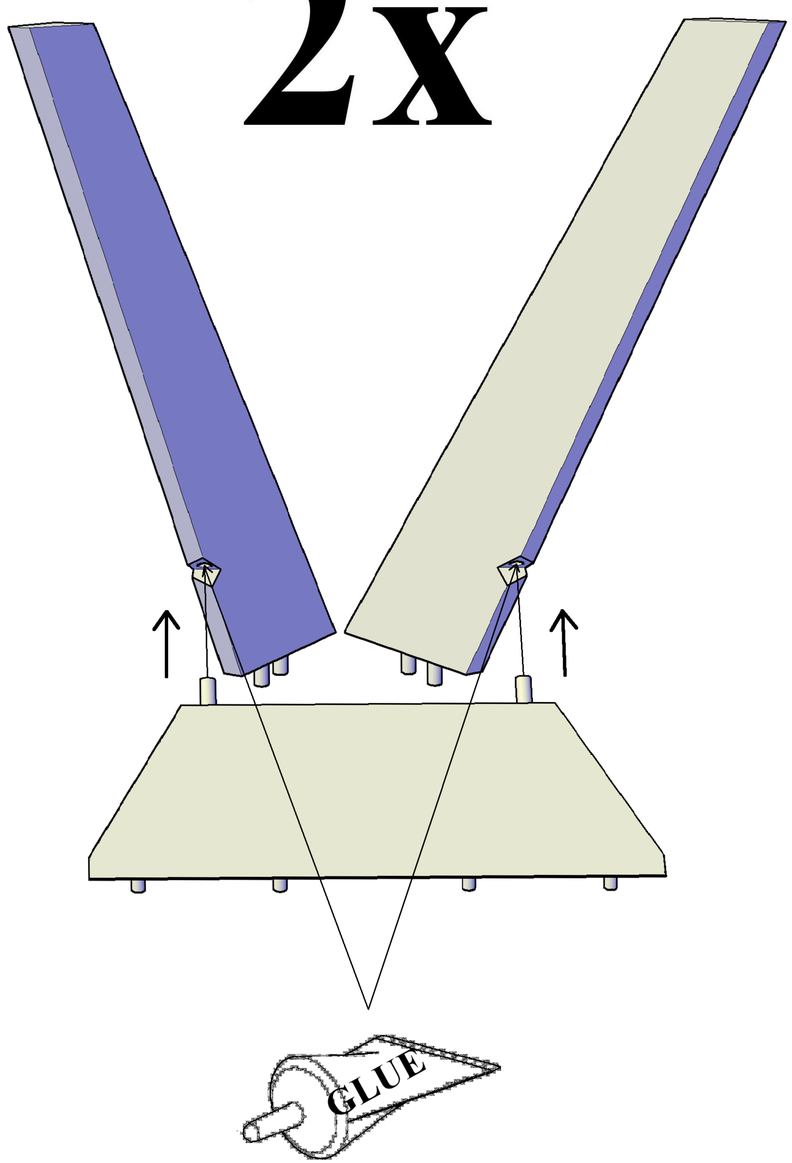

4.

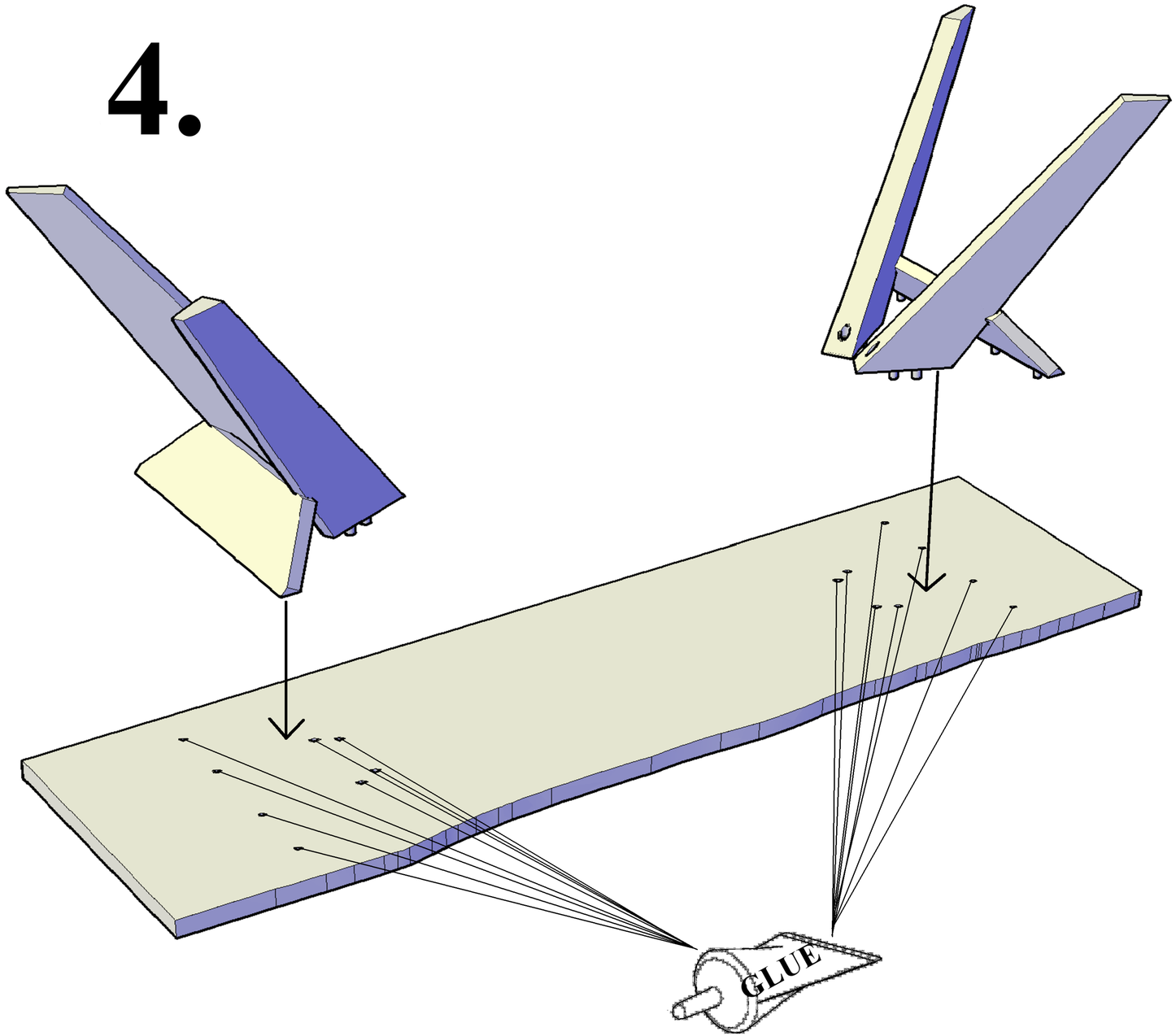

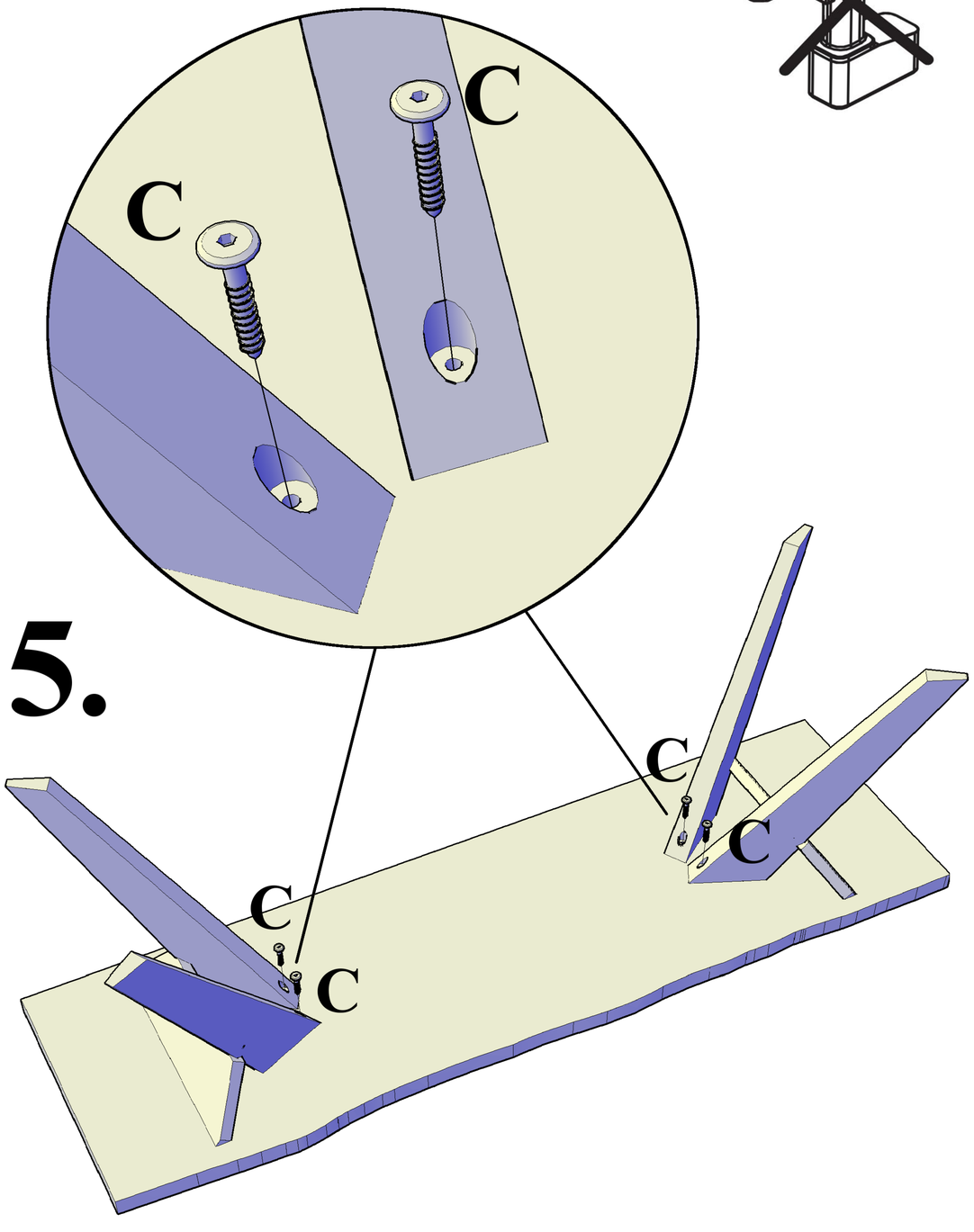
5.
C
C
C
C
C
C

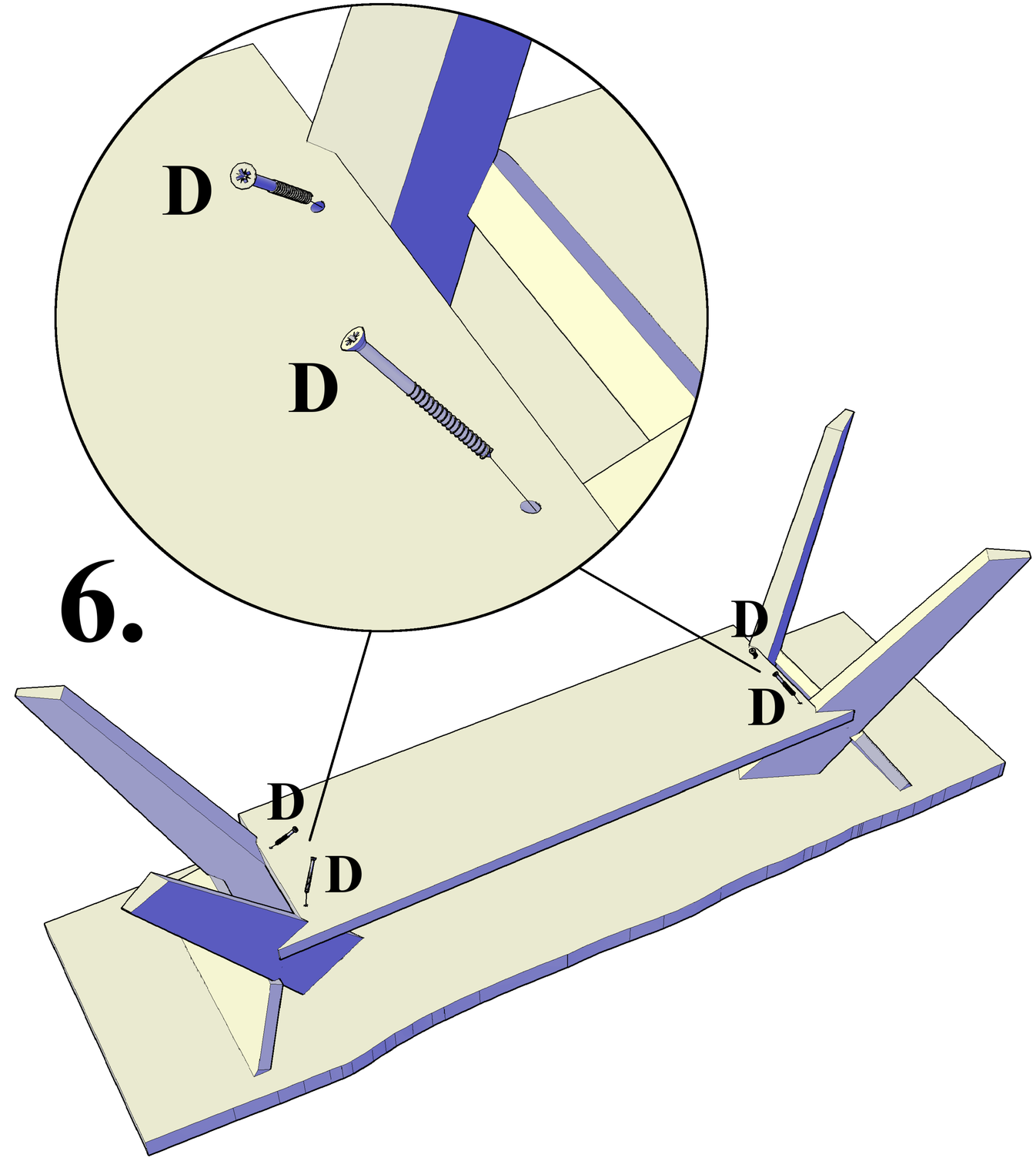
6.
D
D
D
D
D
D